EVT - Stainless FPH & SPH, for Concrete and SFS Standard L Brackets

Fixing brackets					Suitable Thermo pads
Code	Type	A (mm)	B (mm)	C (mm)	Type
563101	single	90	60	60	515873 single
563102	single	90	60	80	
563103	single	90	60	100	
563104	single	90	60	120	
563105	single	90	60	140	
563106	single	90	60	160	
563107	single	90	60	180	
563108	single	90	60	200	
563109	single	90	60	220	
563110	single	90	60	240	
563111	single	90	60	260	
563112	single	90	60	280	
563113	single	90	60	300	
563114	single	90	60	320	

Single fixing bracket

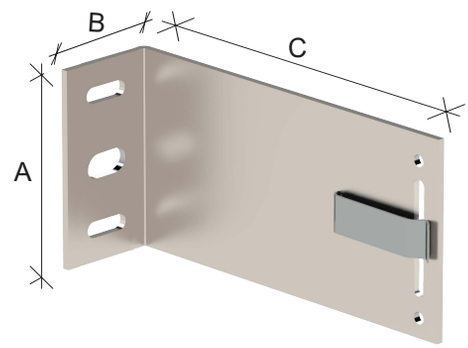

Fixing brackets					Suitable Thermo pads
Code	Type	A (mm)	B (mm)	C (mm)	Type
563120	double	160	60	60	535529 double
563121	double	160	60	80	
563122	double	160	60	100	
563123	double	160	60	120	
563124	double	160	60	140	
563125	double	160	60	160	
563126	double	160	60	180	
563127	double	160	60	200	
563128	double	160	60	220	
563129	double	160	60	240	
563130	double	160	60	260	
563131	double	160	60	280	
563132	double	160	60	300	
563133	double	160	60	320	

Double fixing bracket

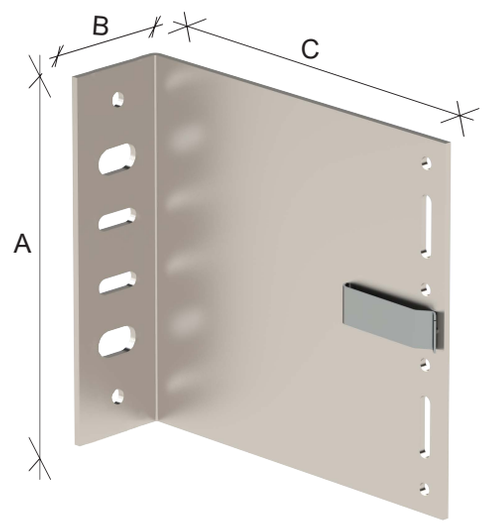

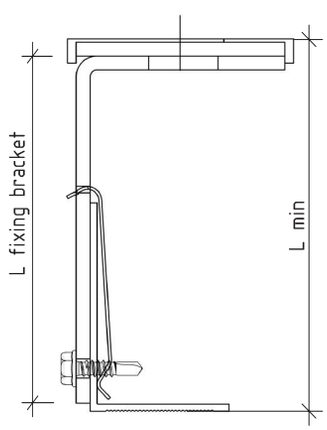

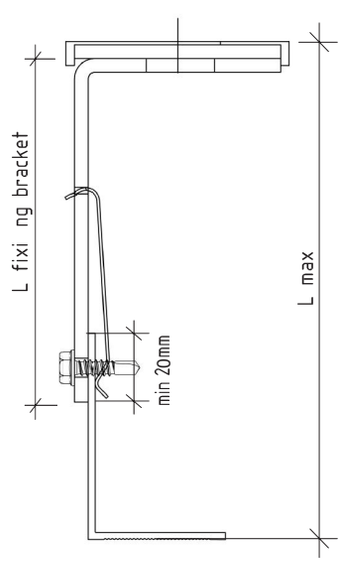

EVT fixing brackets allow to distance the cladding material from the backing wall from min 68mm up to max 312mm with 60mm T profile
It's possible to adjust the profile up to 33mm (Lmin to Lmax)

FIXING BRACKETS AND ACCESSORIES

The performance characteristics of all EVT fixing brackets is tested in laboratory conditions for the worst case scenario. The aim of the test is to determine the load bearing capacity and wind resistance of the brackets and their fixings to the subframe under tension and shear loads.

Summary of results from testing of EVT L-brackets, Stainless Steel

Code	Type	Size(mm)	Material	Base	Design Resistance (kN)	
					Vertical	Horizontal
563101	single	60/60/90	stainless	concrete/sfs	4.74 kN	2.85 kN
563102	single	60/80/90	stainless	concrete/sfs	3.46 kN	2.85 kN
563103	single	60/100/90	stainless	concrete/sfs	2.69 kN	2.66 kN
563104	single	60/120/90	stainless	concrete/sfs	2.23 kN	2.66 kN
563105	single	60/140/90	stainless	concrete/sfs	1.80 kN	2.86 kN
563106	single	60/160/90	stainless	concrete/sfs	1.57 kN	2.86 kN
563107	single	60/180/90	stainless	concrete/sfs	1.37 kN	2.66 kN
563108	single	60/200/90	stainless	concrete/sfs	1.22 kN	2.66 kN
563109	single	60/220/90	stainless	concrete/sfs	1.10 kN	2.66 kN
563110	single	60/240/90	stainless	concrete/sfs	1.00 kN	2.66 kN
563111	single	60/260/90	stainless	concrete/sfs	0.92 kN	2.85 kN
563112	single	60/280/90	stainless	concrete/sfs	0.87 kN	2.85 kN
563113	single	60/300/90	stainless	concrete/sfs	0.79 kN	2.85 kN
563114	single	60/320/90	stainless	concrete/sfs	0.74 kN	2.85 kN
563120	double	60/60/160	stainless	concrete/sfs	11.99 kN	6.44 kN
563121	double	60/80/160	stainless	concrete/sfs	10.55 kN	6.44 kN
563122	double	60/100/160	stainless	concrete/sfs	8.27 kN	6.44 kN
563123	double	60/120/160	stainless	concrete/sfs	6.67 kN	6.44 kN
563124	double	60/140/160	stainless	concrete/sfs	5.56 kN	6.44 kN
563125	double	60/160/160	stainless	concrete/sfs	4.77 kN	6.44 kN
563126	double	60/180/160	stainless	concrete/sfs	4.18 kN	6.44 kN
563127	double	60/200/160	stainless	concrete/sfs	3.60 kN	6.44 kN
563128	double	60/220/160	stainless	concrete/sfs	3.34 kN	6.38 kN
563129	double	60/240/160	stainless	concrete/sfs	3.03 kN	6.38 kN
563130	double	60/260/160	stainless	concrete/sfs	2.76 kN	6.38 kN
563131	double	60/280/160	stainless	concrete/sfs	2.59 kN	6.38 kN
563132	double	60/300/160	stainless	concrete/sfs	2.41 kN	6.38 kN
563133	double	60/320/160	stainless	concrete/sfs	2.23 kN	6.38 kN

EVT- L-Brackets, Stainless Steel
Fixed Point Bracket

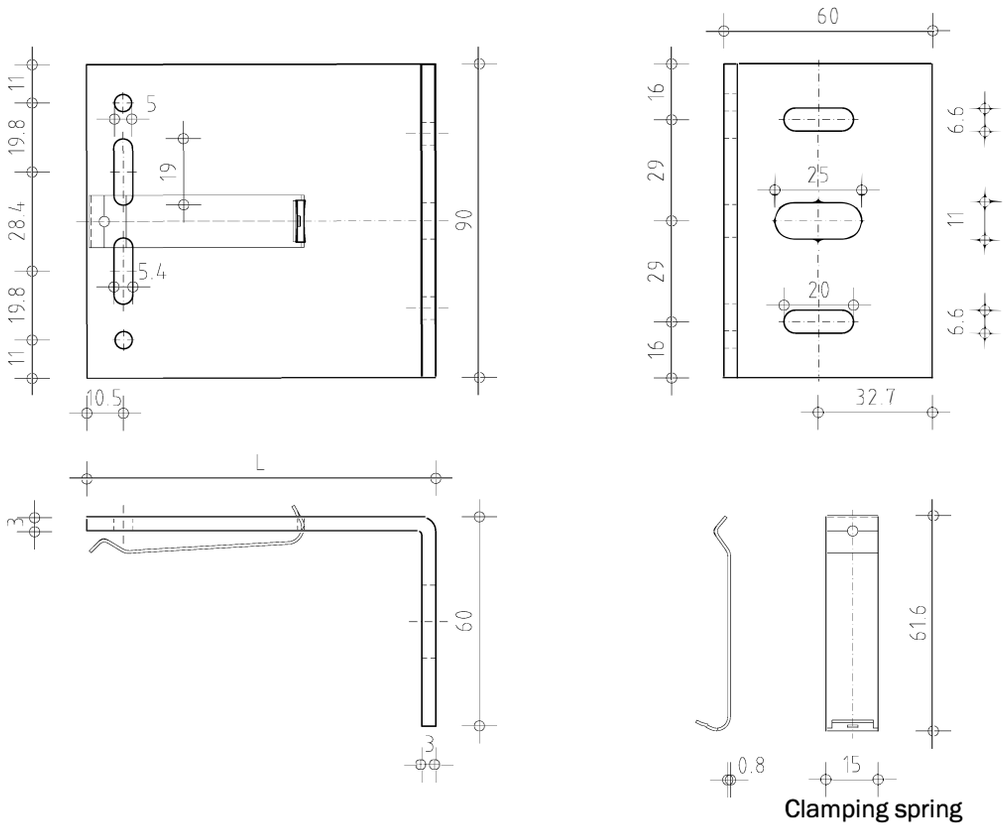

L-Bracket Sliding Point
Suitable for Concrete and Steel
*Custom lengths available on demand

Item	Material
L-Bracket	St. steel 1.4571/1.4401/1.4404
Clip	Stainless steel

L* =	
40mm	220mm
60mm	240mm
80mm	260mm
100mm	280mm
120mm	300mm
160mm	320mm
180mm	340mm
200mm	360mm

EVT- L-Brackets, Stainless Steel
Fixed Point Bracket

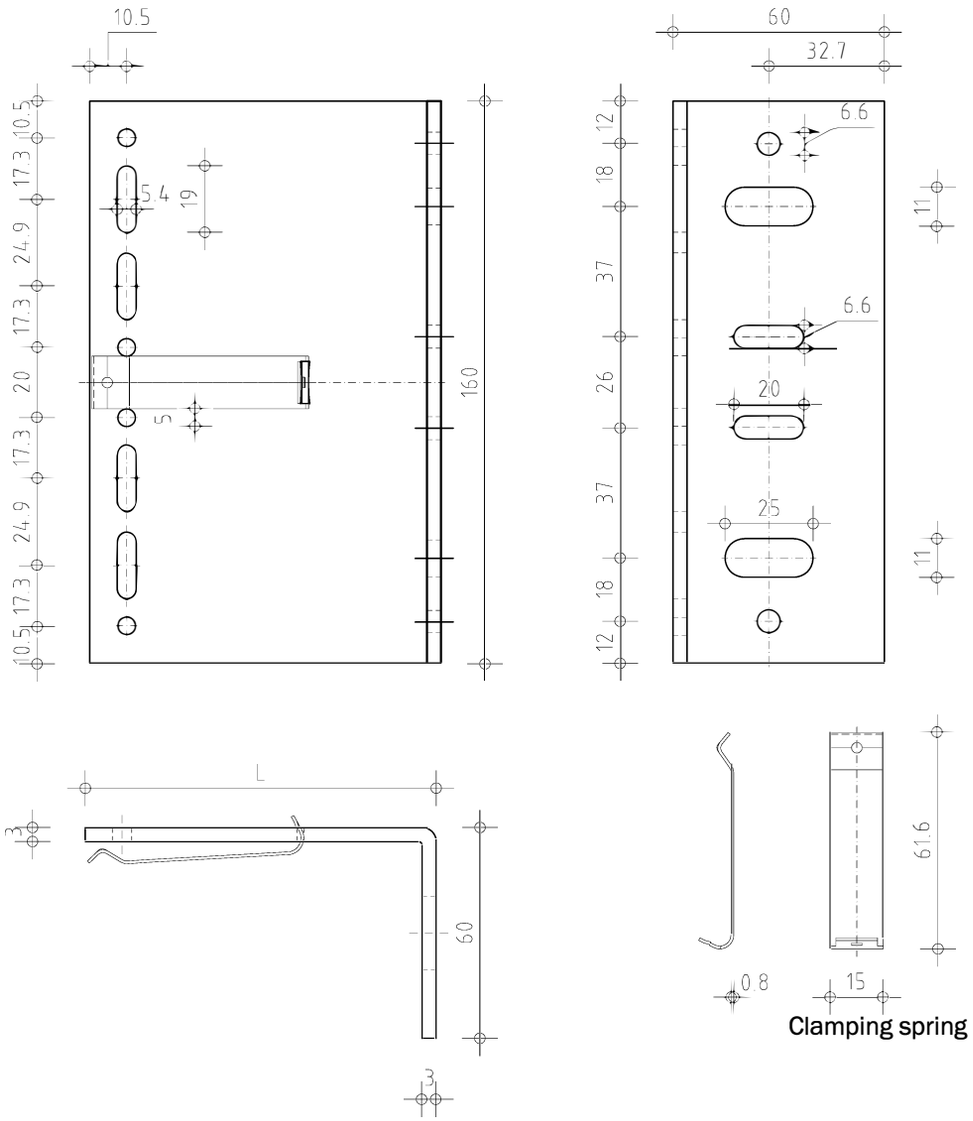

L-Bracket Fixed Point,
Suitable for Concrete and Steel
*Custom lengths available on demand

Item	Material
L-Bracket	St. steel 1.4571/1.4401/1.4404
Clip	Stainless steel

L* =	
40mm	220mm
60mm	240mm
80mm	260mm
100mm	280mm
120mm	300mm
160mm	320mm
180mm	340mm
200mm	360mm