Facade systems

ATK 103

Technical Information

fischer

innovative solutions

Clasp restraint systems (for adjustable clasps) ATK 103

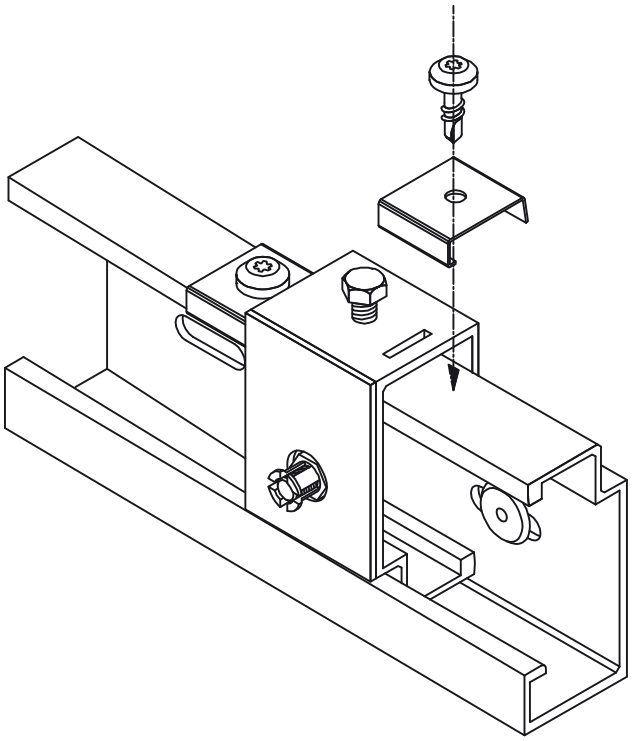

U-pieces - all ATK 103 Systems

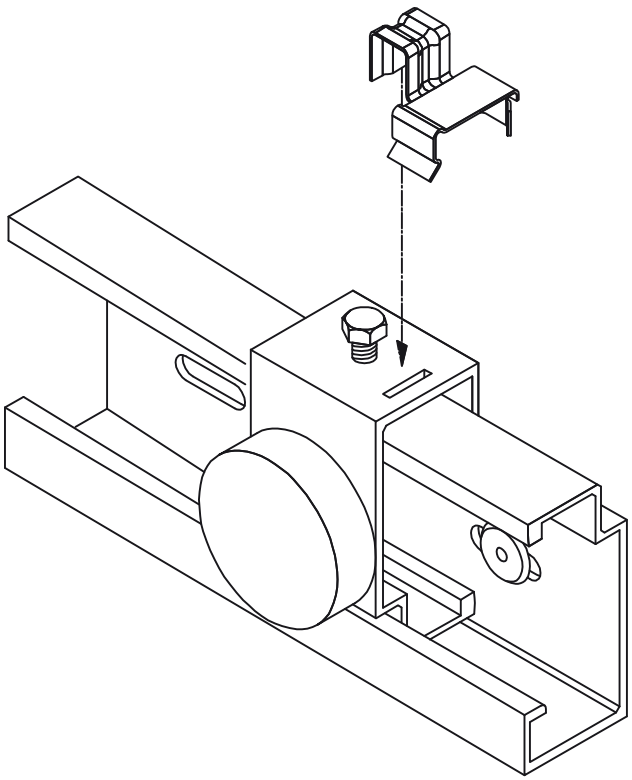

Fixing clip - ATK 103 S und ATK 103 P

Fixing clip only for tiles < 60x90 cm
and a weight < 30 kg/m²!

fischer innovative solutions

Support sections ATK 103

available perforated and non-perforated

ATK 103 S

non-perforated
Art. 668401

* perforated
Art. G68401

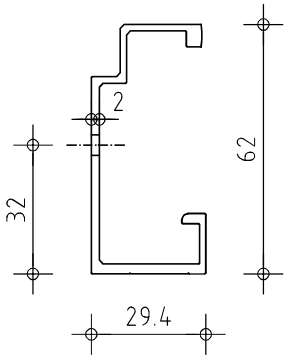

ATK 103 P

non-perforated
Art. 668402

* perforated
Art. G68402

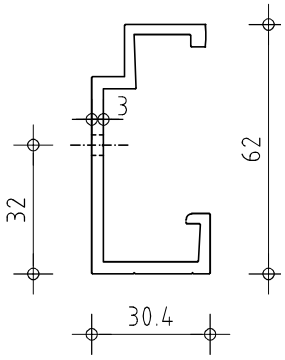

ATK 103 S 20

non-perforated
Art. 668422

* perforated
Art. G68422

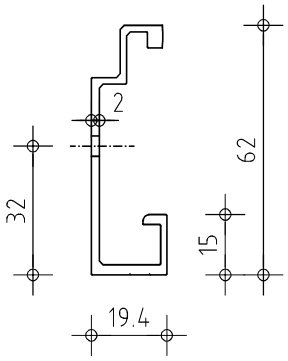

ATK 103 P 20

non-perforated
Art. 668420

* perforated
Art. G68420

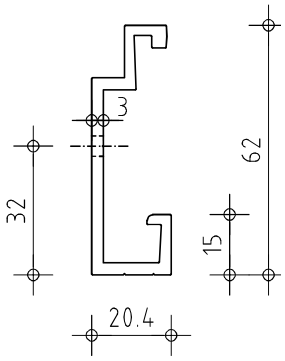

ATK 103 S 20 T

non-perforated
Art. 668440

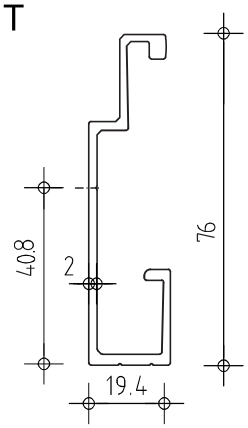

* Pre-perforated support sections (on demand)

Clasp restraint systems ATK 103

U-Pieces

for clasps
Type S / P / EE

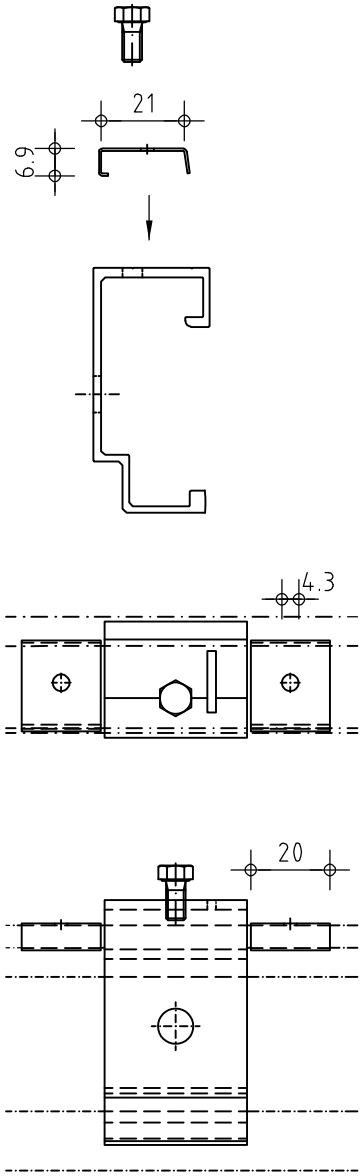

for clasps
Type S 20 / P 20 / EE 20 / S 20 / S 20 T

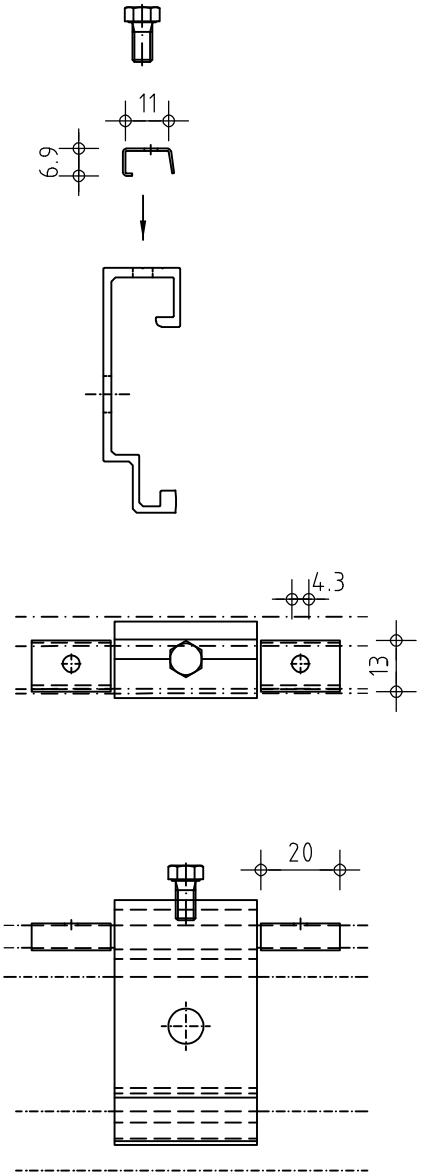

Fixing Clip

for clasps
Type S / P

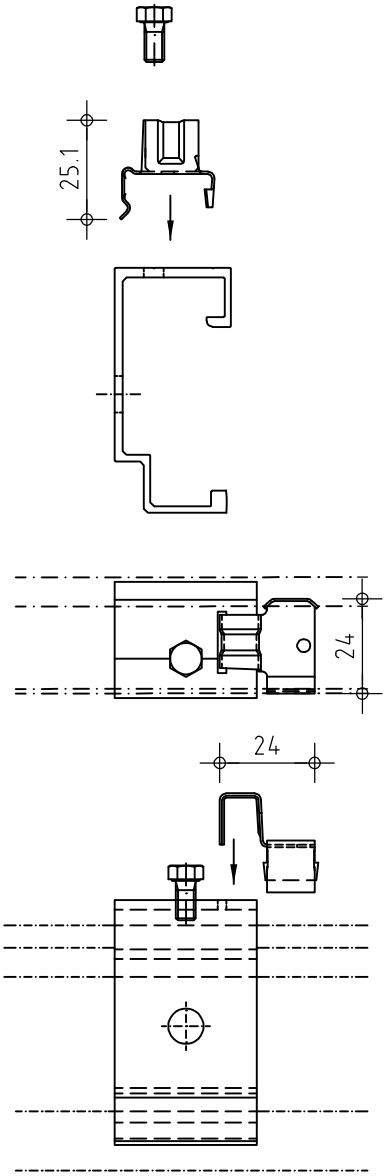

Fixing Clamp only for tiles < 60x90 cm
and a weight < 30 kg/m²

fischer
innovative solutions

Middle Position ATK 103

ATK 103 S

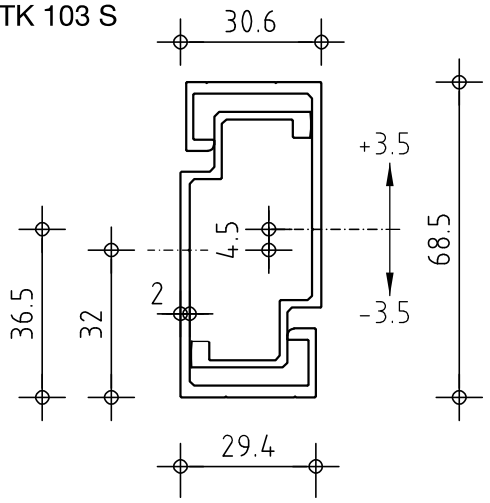

ATK 103 S 20

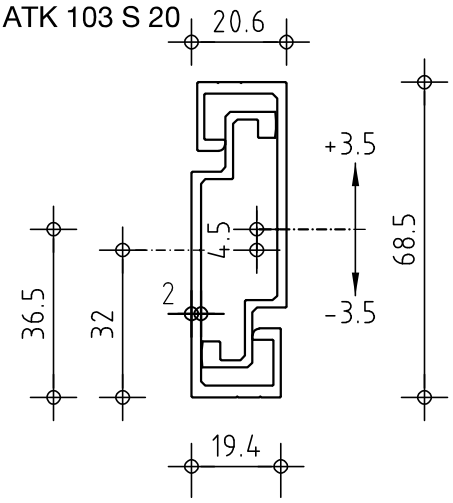

ATK 103 P

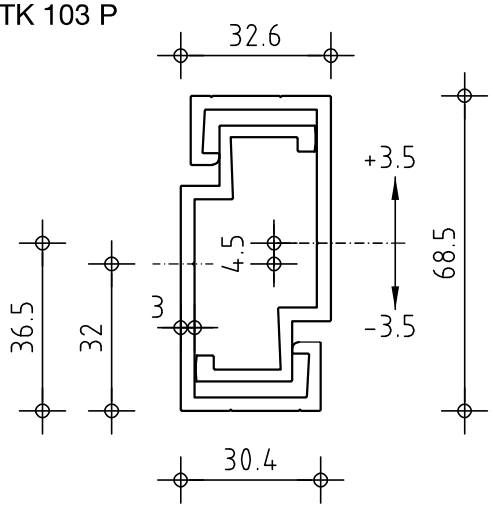

ATK 103 P 20

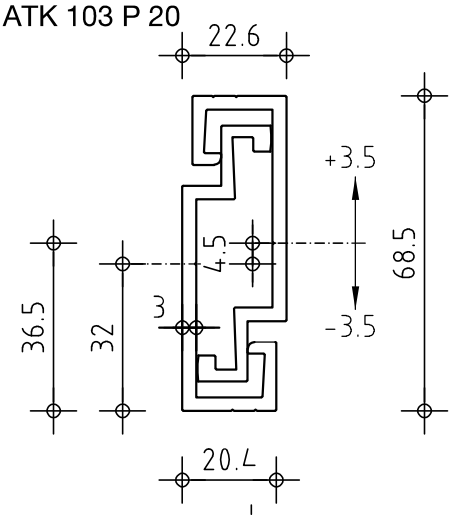

ATK 103 S
and ATK 103 P

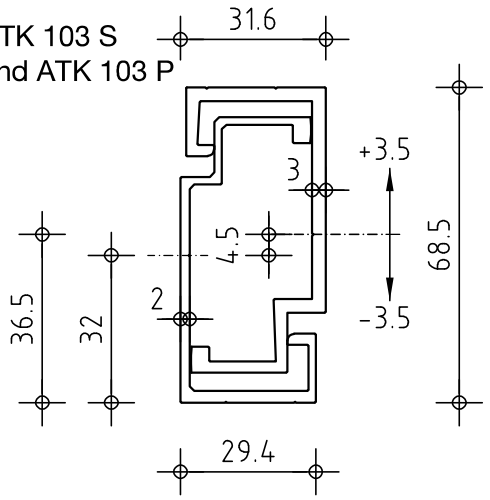

ATK 103 P
and ATK 103 S

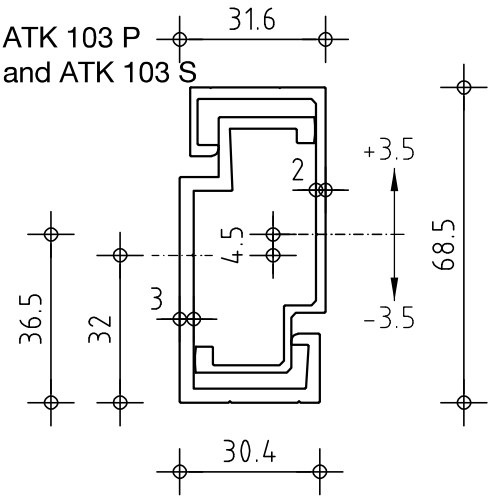

Clasp ATK 103 S e.g. for Buchtal Quadro; Fischer FZP/M6

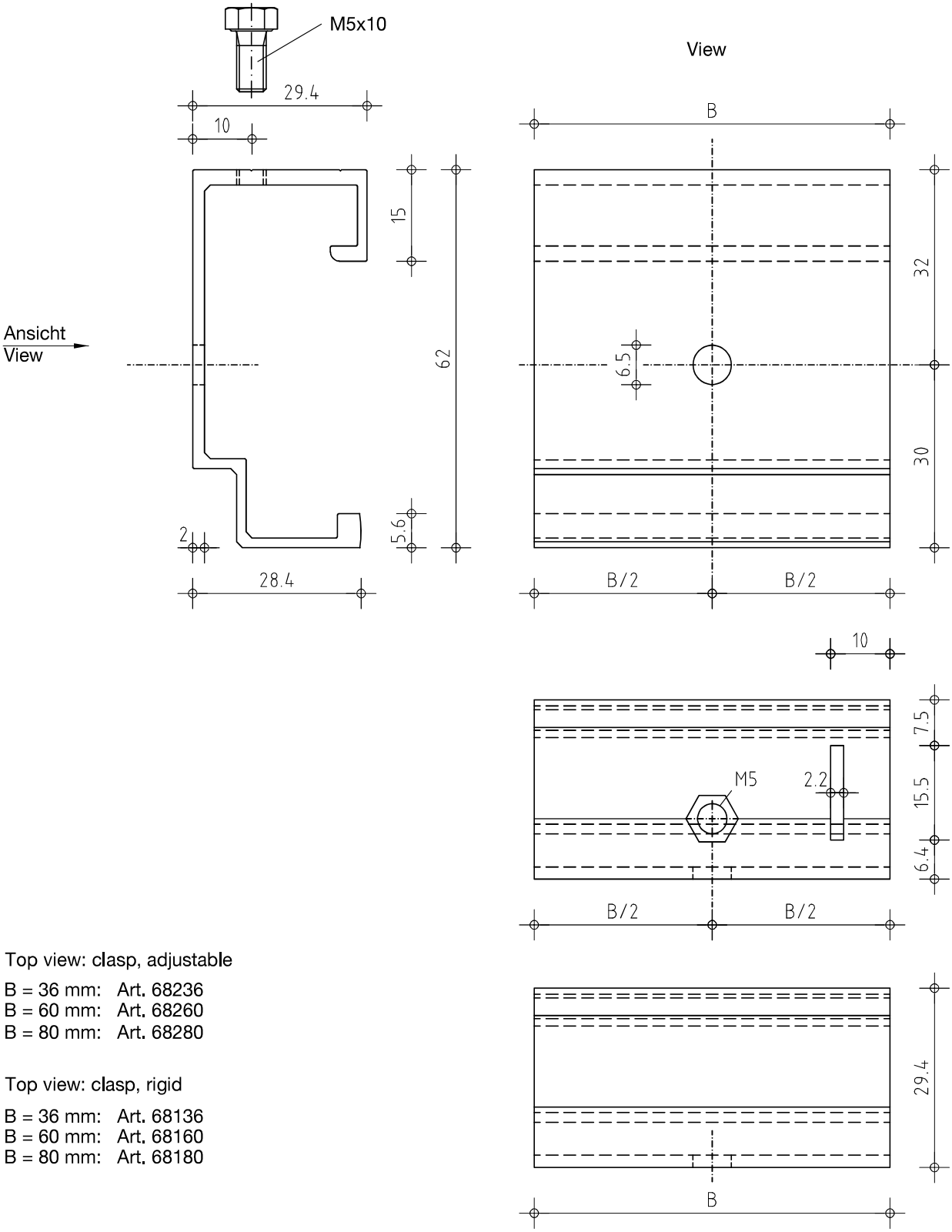

Top view: clasp, adjustable

B = 36 mm: Art. 68236
B = 60 mm: Art. 68260
B = 80 mm: Art. 68280

Top view: clasp, rigid

B = 36 mm: Art. 68136
B = 60 mm: Art. 68160
B = 80 mm: Art. 68180

Clasp ATK 103 S e.g. for Fischer FZP/M8; FZP-N

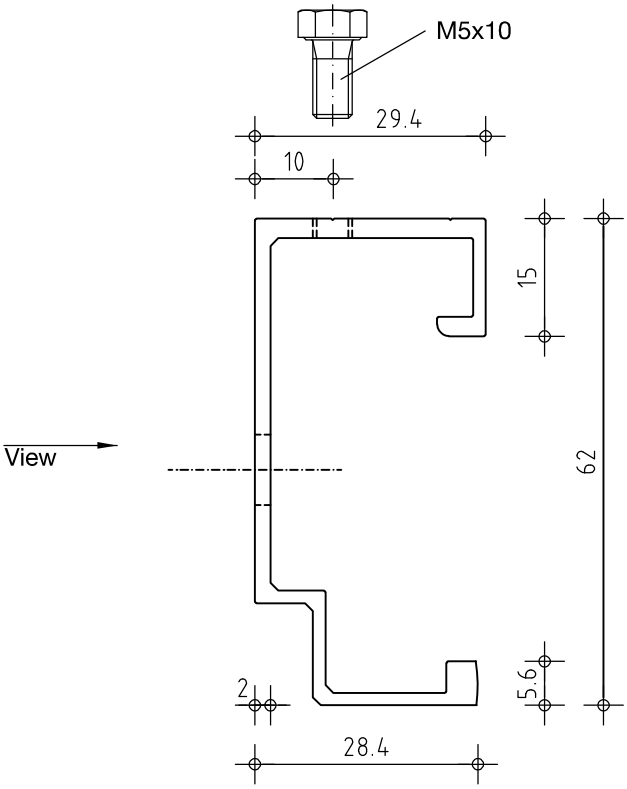

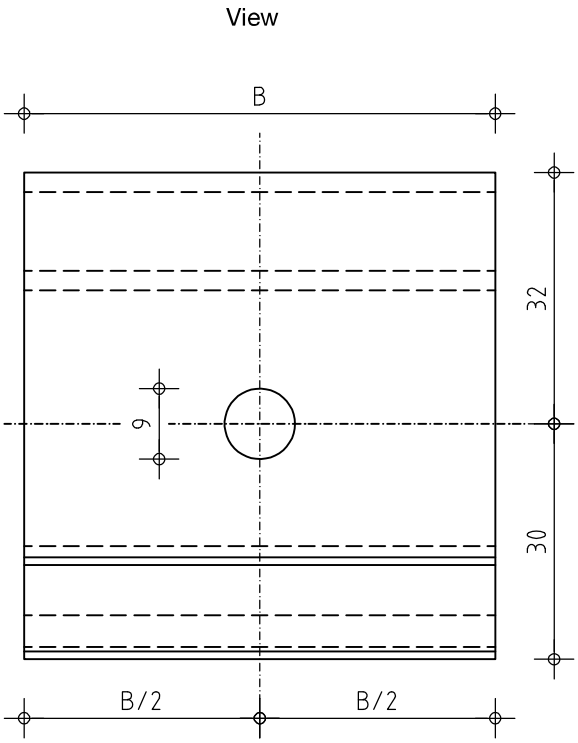

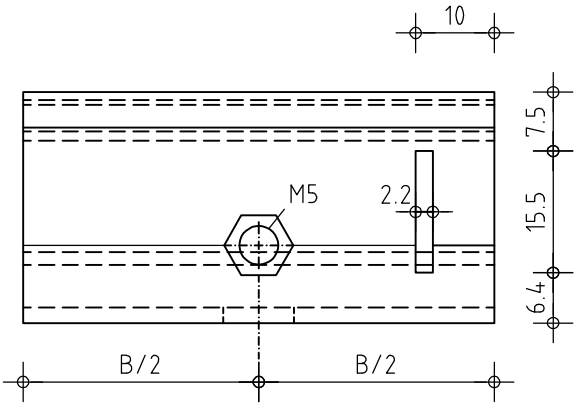

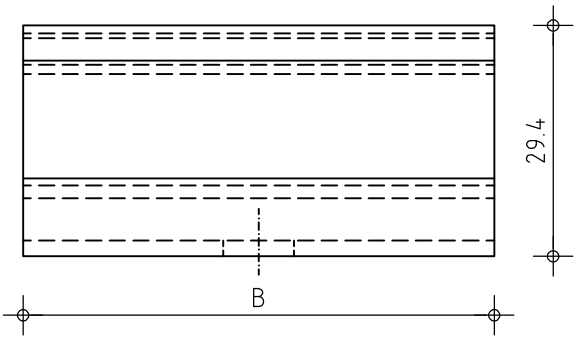

Top view: clasp, adjustable

B = 36 mm: Art. 68239
B = 60 mm: Art. 68269
B = 80 mm: Art. 68289

Top view: clasp, rigid

B = 36 mm: Art. 68139
B = 60 mm: Art. 68169
B = 80 mm: Art. 68189

Clasp ATK 103 S e.g. for pushthrough anchorage hexagonal

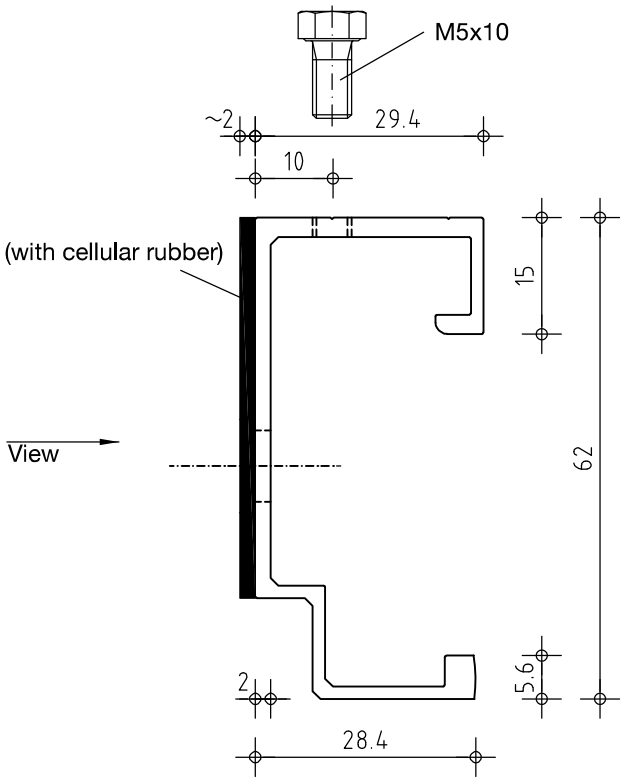

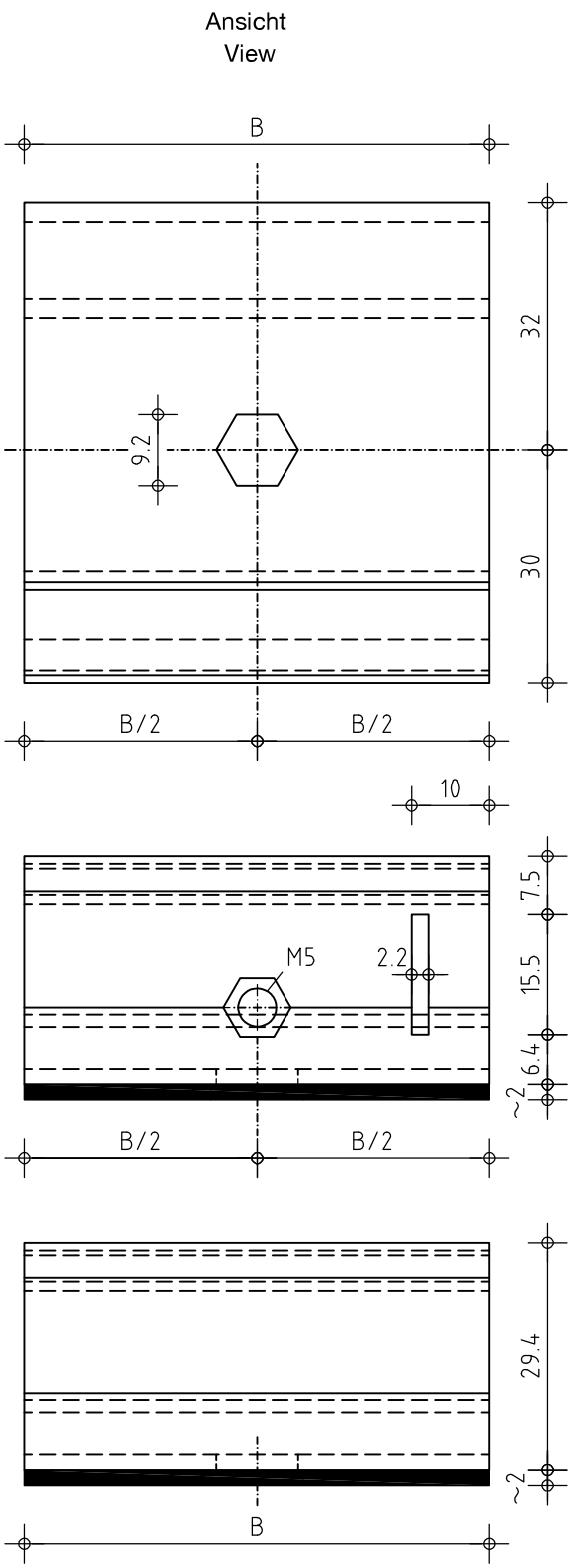

Top view: clasp, adjustable

B = 36 mm: Art. 68632
B = 60 mm: Art. 68662
B = 80 mm: Art. 68682

Top view: clasp, rigid

B = 36 mm: Art. 68532
B = 60 mm: Art. 68562
B = 80 mm: Art. 68582

Clasps without cellular rubber on demand

Clasp ATK 103 S e.g. for Lithodecor / M6

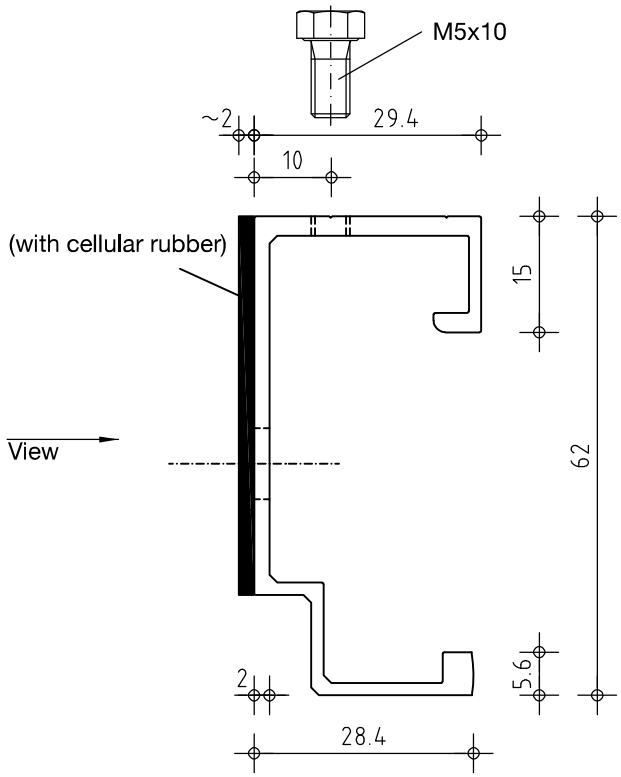

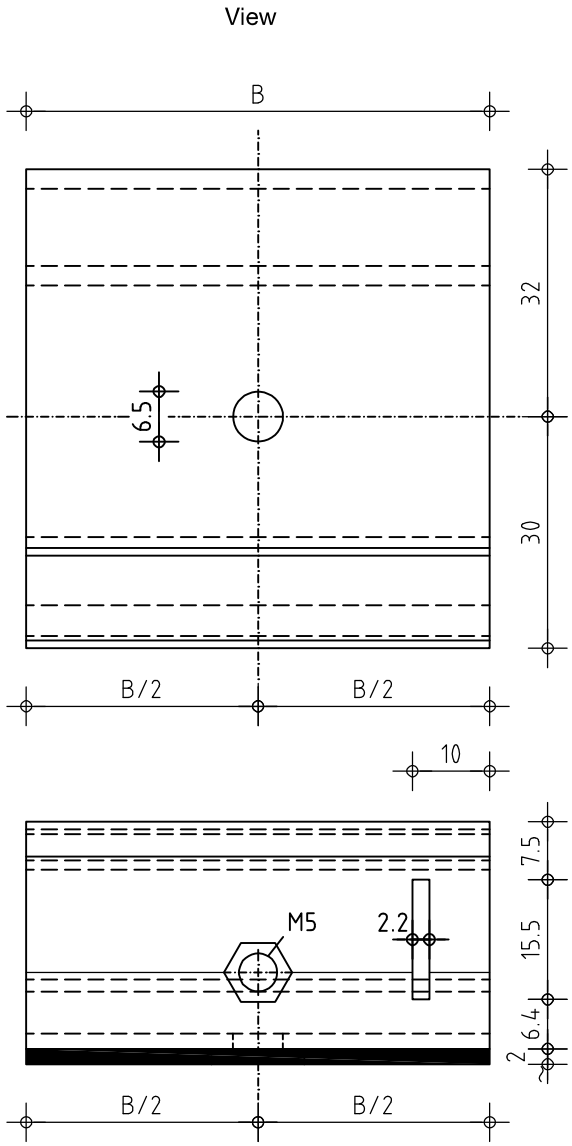

Top view: clasp, adjustable

B = 36 mm: Art. 68633
B = 60 mm: Art. 68663
B = 80 mm: Art. 68683

Top view: clasp, rigid

B = 36 mm: Art. 68533
B = 60 mm: Art. 68563
B = 80 mm: Art. 68583

Clasp ATK 103 S 20 e.g. for pushthrough anchorage hexagonal

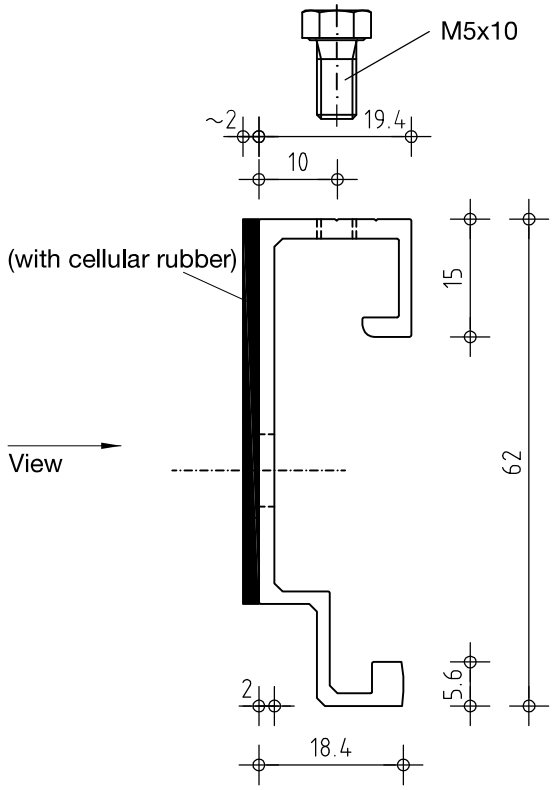

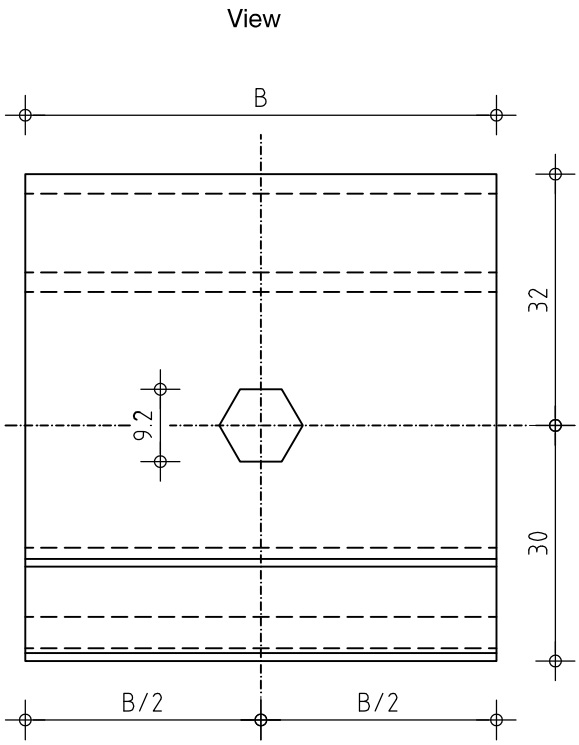

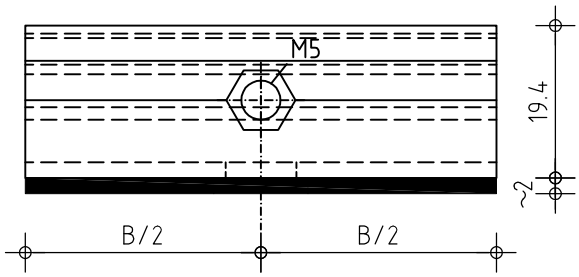

Top view: clasp, adjustable

B = 36 mm: Art. 28632
B = 60 mm: Art. 28662
B = 80 mm: Art. 28682

Top view: clasp, rigid

B = 36 mm: Art. 28532
B = 60 mm: Art. 28562
B = 80 mm: Art. 28582

Clasps without cellular rubber on demand

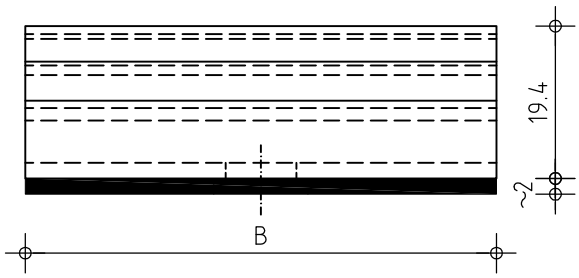

Clasp ATK 103 S 20 e.g. for short threaded bolts M6

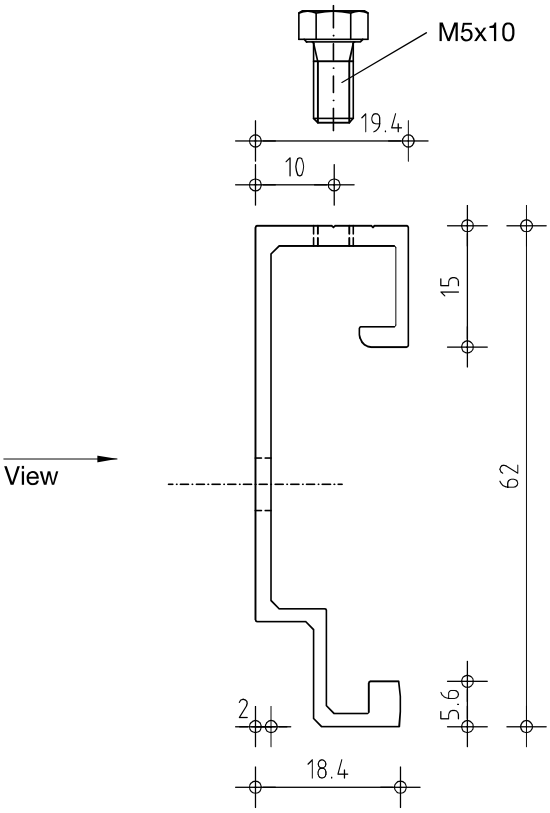

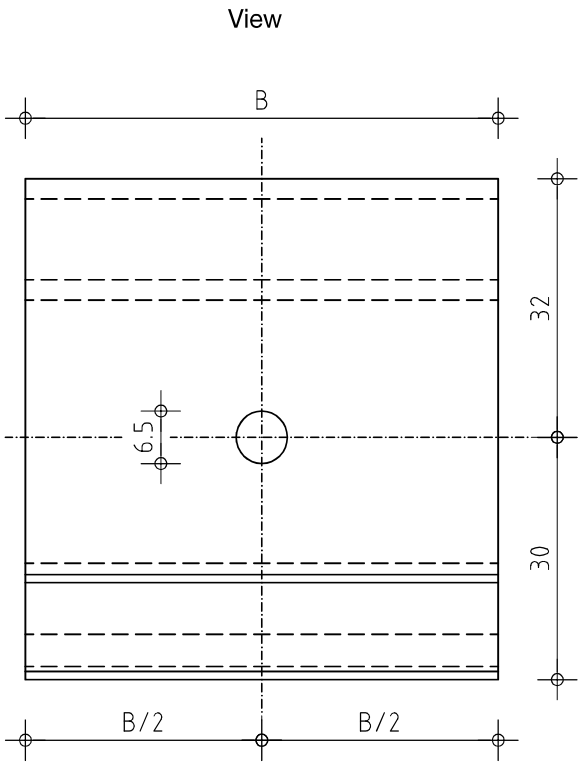

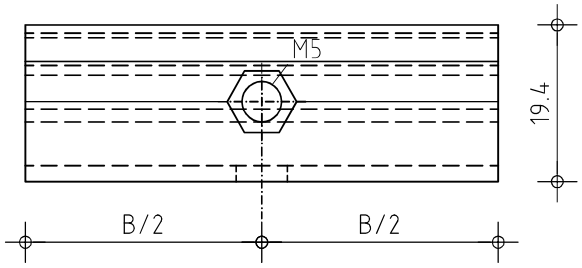

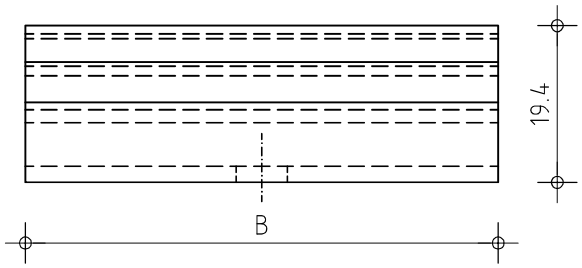

Top view: clasp, adjustable

B = 36 mm: Art. 28236
B = 60 mm: Art. 28260
B = 80 mm: Art. 28280

Top view: clasp, rigid

B = 36 mm: Art. 28136
B = 60 mm: Art. 28160
B = 80 mm: Art. 28180

Clasp ATK 103 S 20 e.g. for short threaded bolts M8

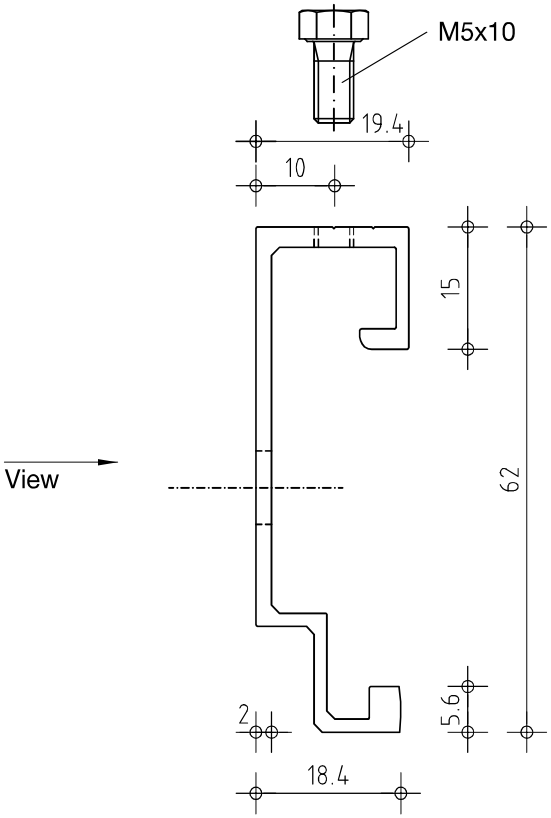

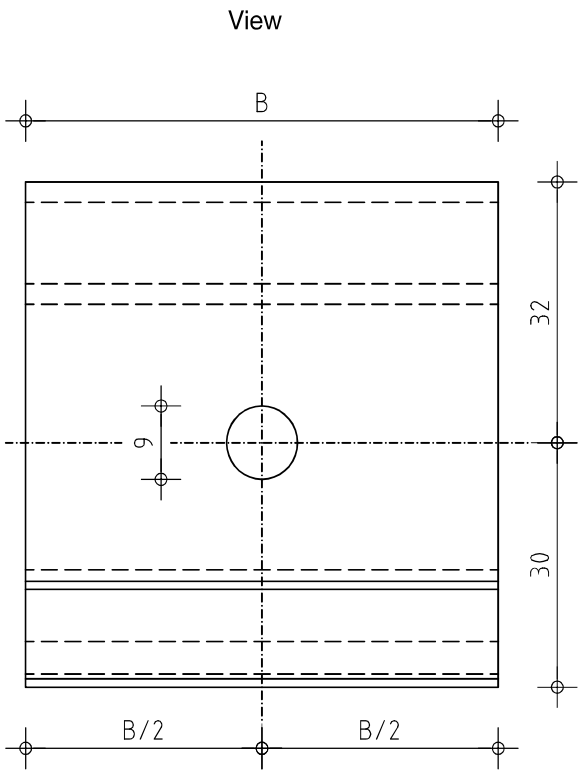

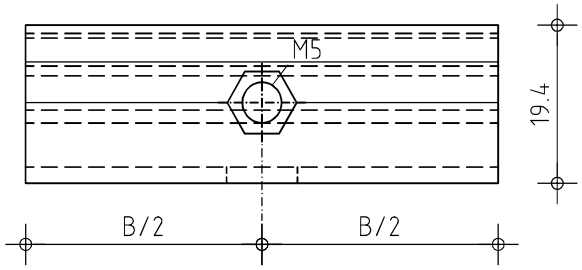

Top view: clasp, adjustable

B = 36 mm: Art. 28239
B = 60 mm: Art. 28269
B = 80 mm: Art. 28289

Top view: clasp, rigid

B = 36 mm: Art. 28139
B = 60 mm: Art. 28169
B = 80 mm: Art. 28189

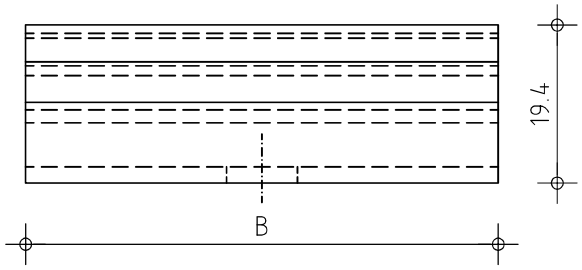

Clasp ATK 103 S 20 e.g. for Lithodecor / M6

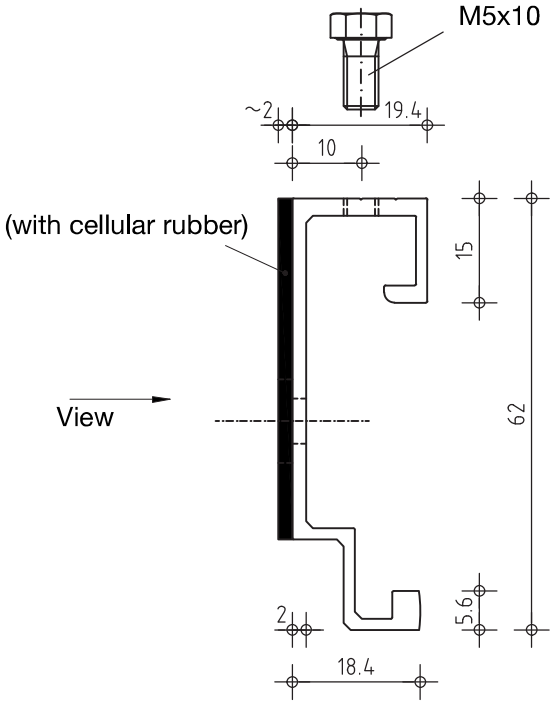

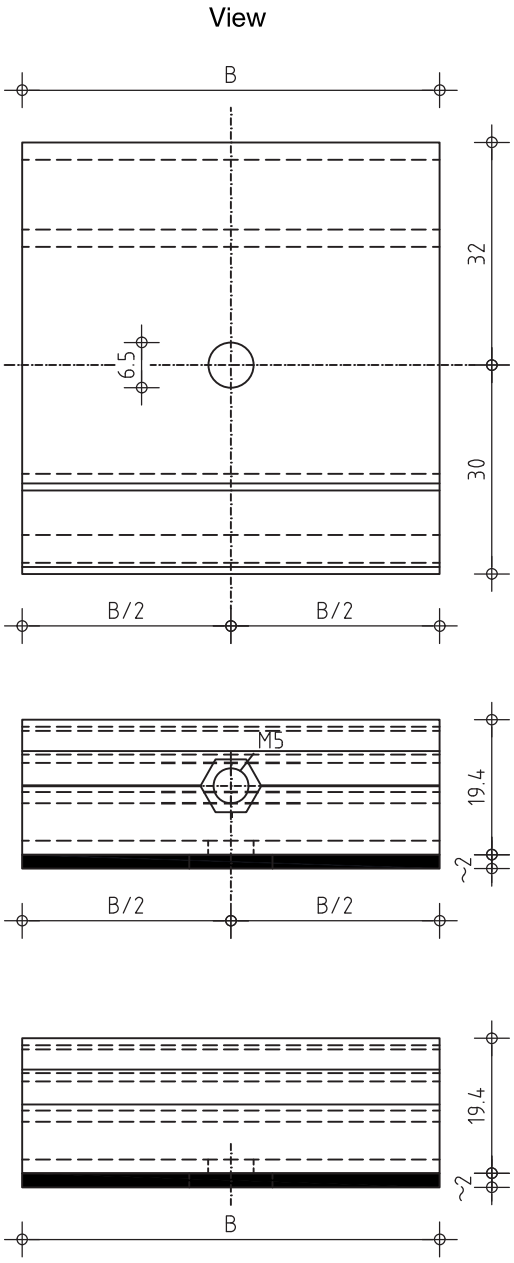

Top view: clasp, adjustable

B = 36 mm: Art. 28633
B = 60 mm: Art. 28663
B = 80 mm: Art. 28683

Top view: clasp, rigid

B = 36 mm: Art. 28533
B = 60 mm: Art. 28563
B = 80 mm: Art. 28583

Clasp ATK 103 S 20 T e.g. for short threaded bolts M6

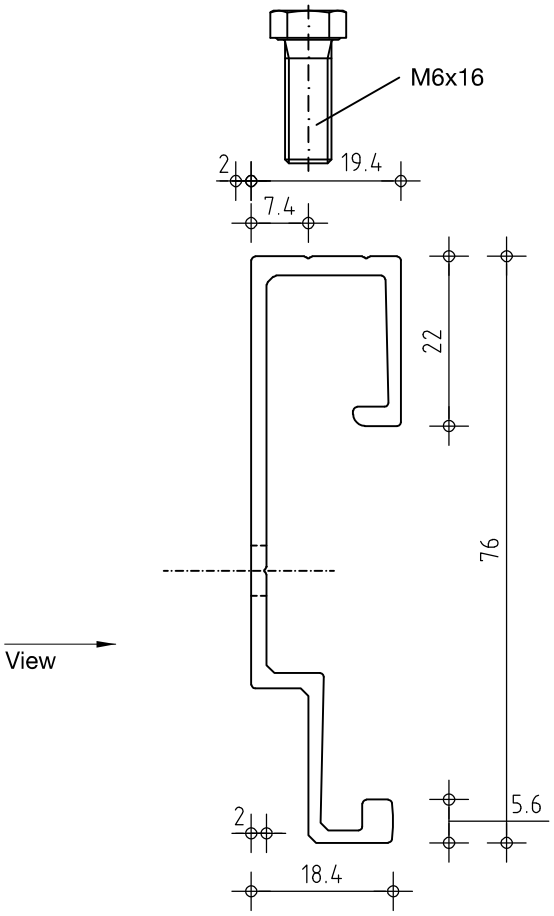

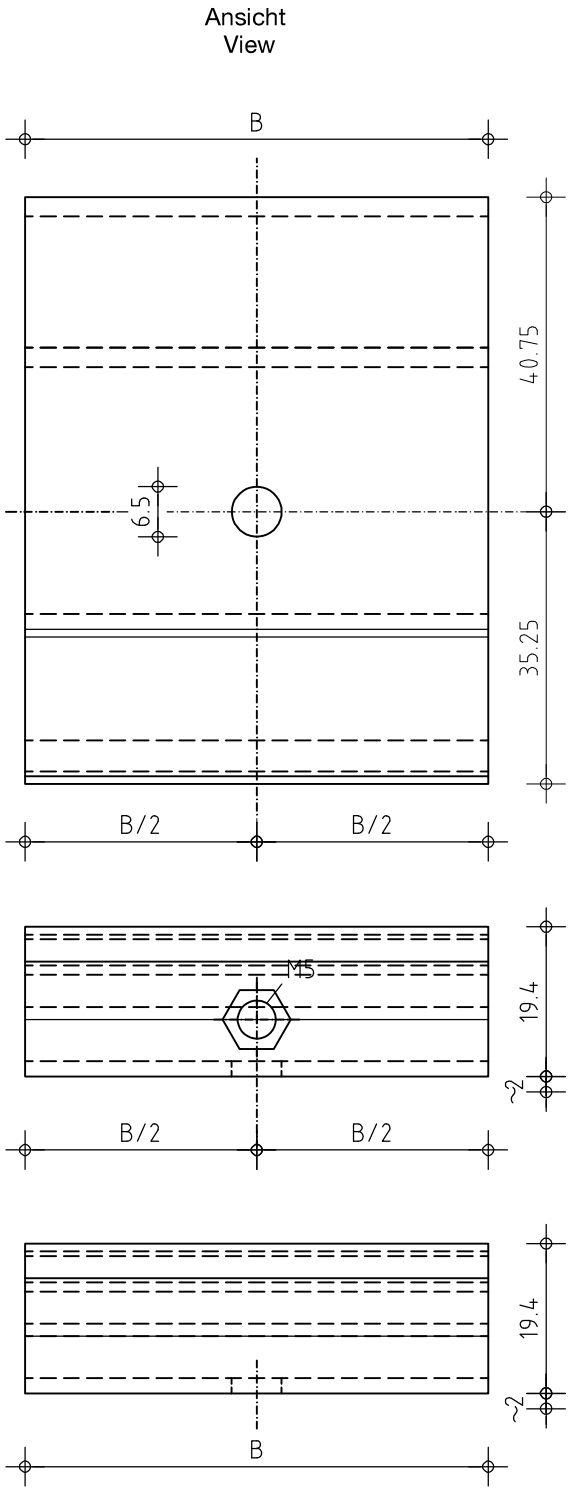

Top view: clasp, adjustable

B = 36 mm: Art. 18236
B = 60 mm: Art. 18260
B = 80 mm: Art. 18280

Top view: clasp, rigid

B = 36 mm: Art. 18136
B = 60 mm: Art. 18160
B = 80 mm: Art. 18180

Clasps without cellular rubber on demand

Clasp ATK 103 S 20 T e.g. for short threaded bolts M8

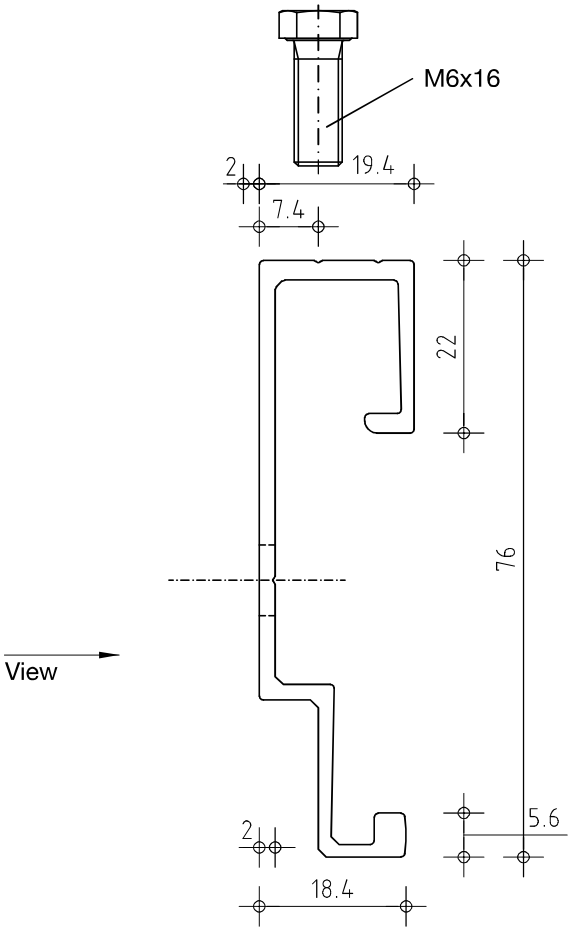

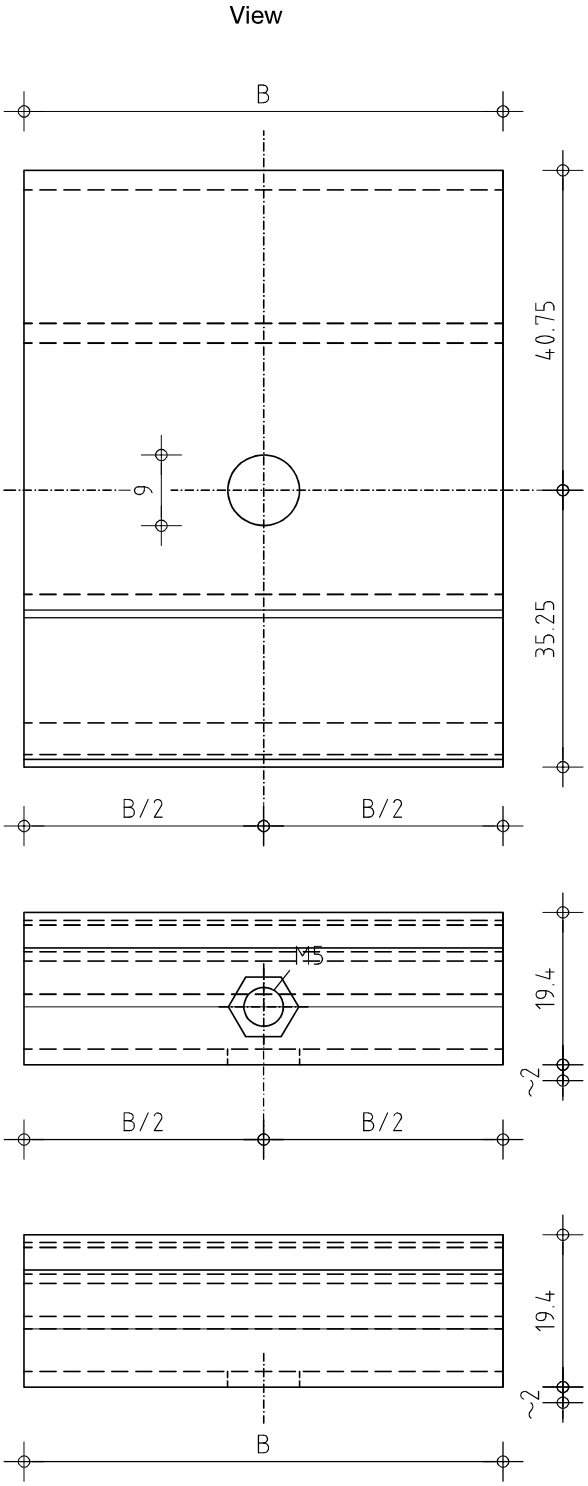

Top view: clasp, adjustable

B = 36 mm: Art. 18239
B = 60 mm: Art. 18269
B = 80 mm: Art. 18289

Top view: clasp, rigid

B = 36 mm: Art. 18139
B = 60 mm: Art. 18169
B = 80 mm: Art. 18189

Clasps without cellular rubber on demand

Clasp ATK 103 S 20 T e.g. for pushthrough anchorage hexagonal

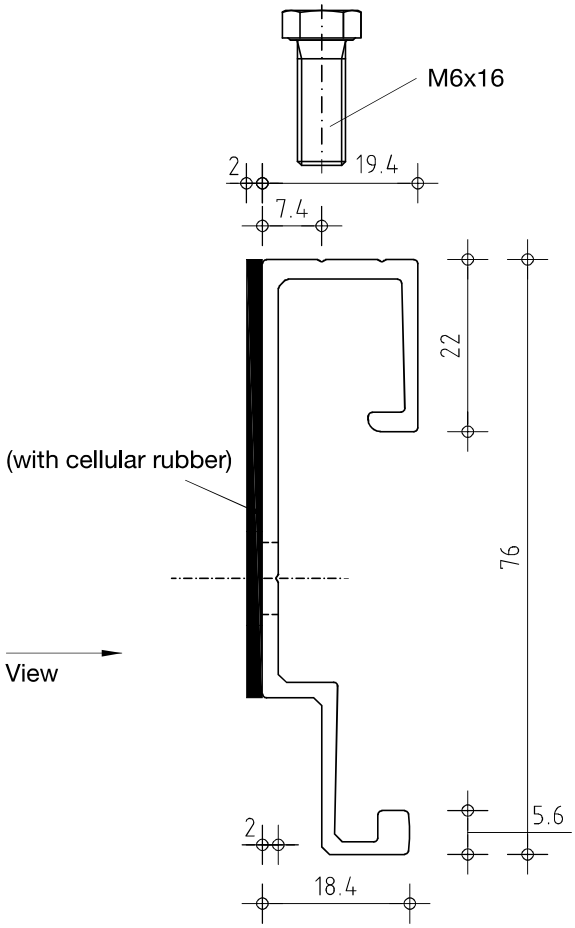

View

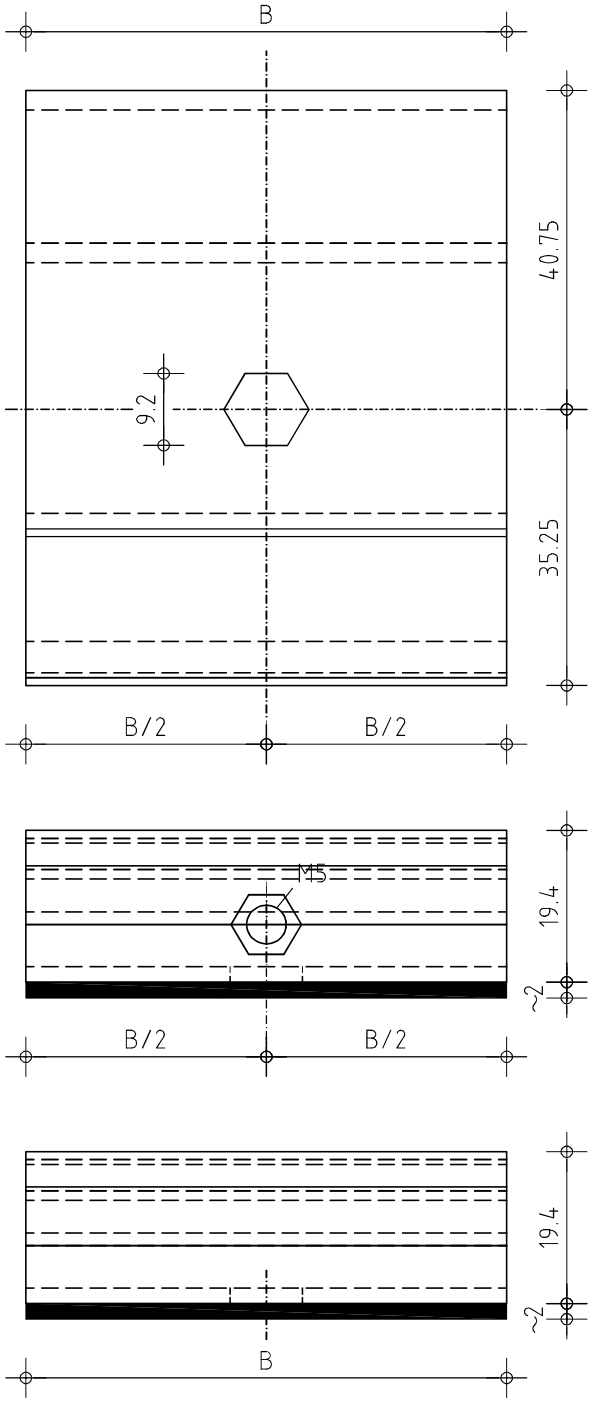

Top view: clasp, adjustable

B = 36 mm: Art. 18632
B = 60 mm: Art. 18662
B = 80 mm: Art. 18682

Top view: clasp, rigid

B = 36 mm: Art. 18532
B = 60 mm: Art. 18562
B = 80 mm: Art. 18582

Clasps without cellular rubber on demand

Clasp ATK 103 P e.g. for Buchtal Quadro; Fischer FZP/M6

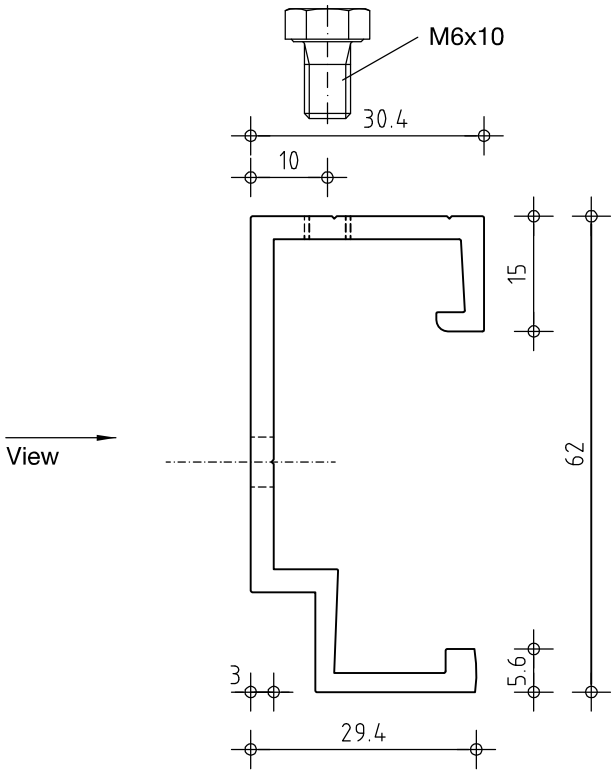

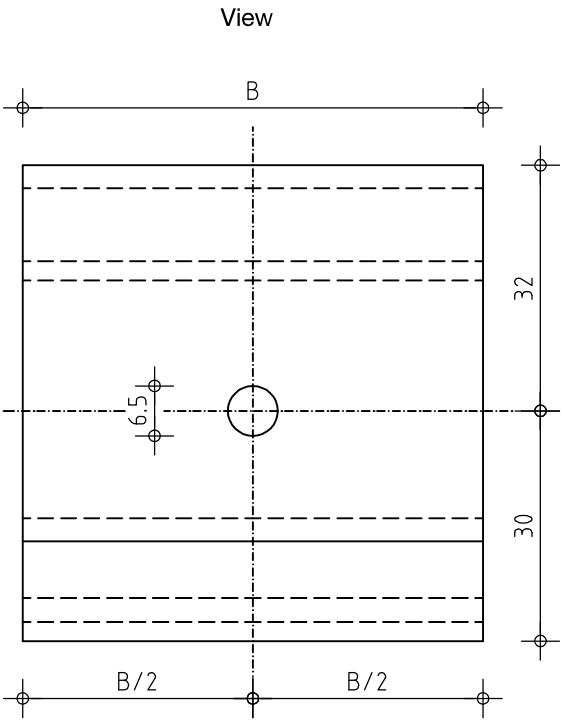

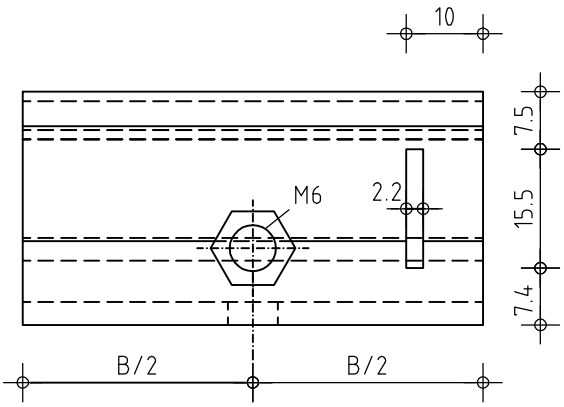

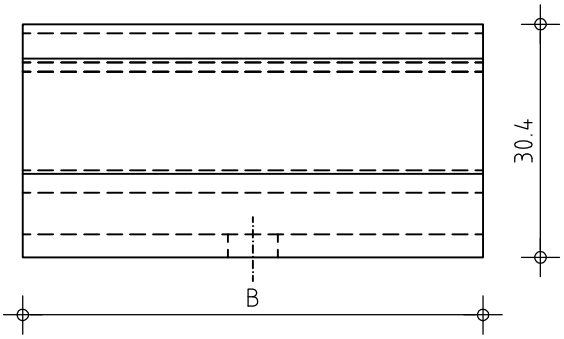

Top view: clasp, adjustable

B = 36 mm: Art. 68436
B = 60 mm: Art. 68460
B = 80 mm: Art. 68480

Top view: clasp, rigid

B = 36 mm: Art. 68336
B = 60 mm: Art. 68360
B = 80 mm: Art. 68380

Clasp ATK 103 P e.g. for Fischer FZP/M8;FZP-N

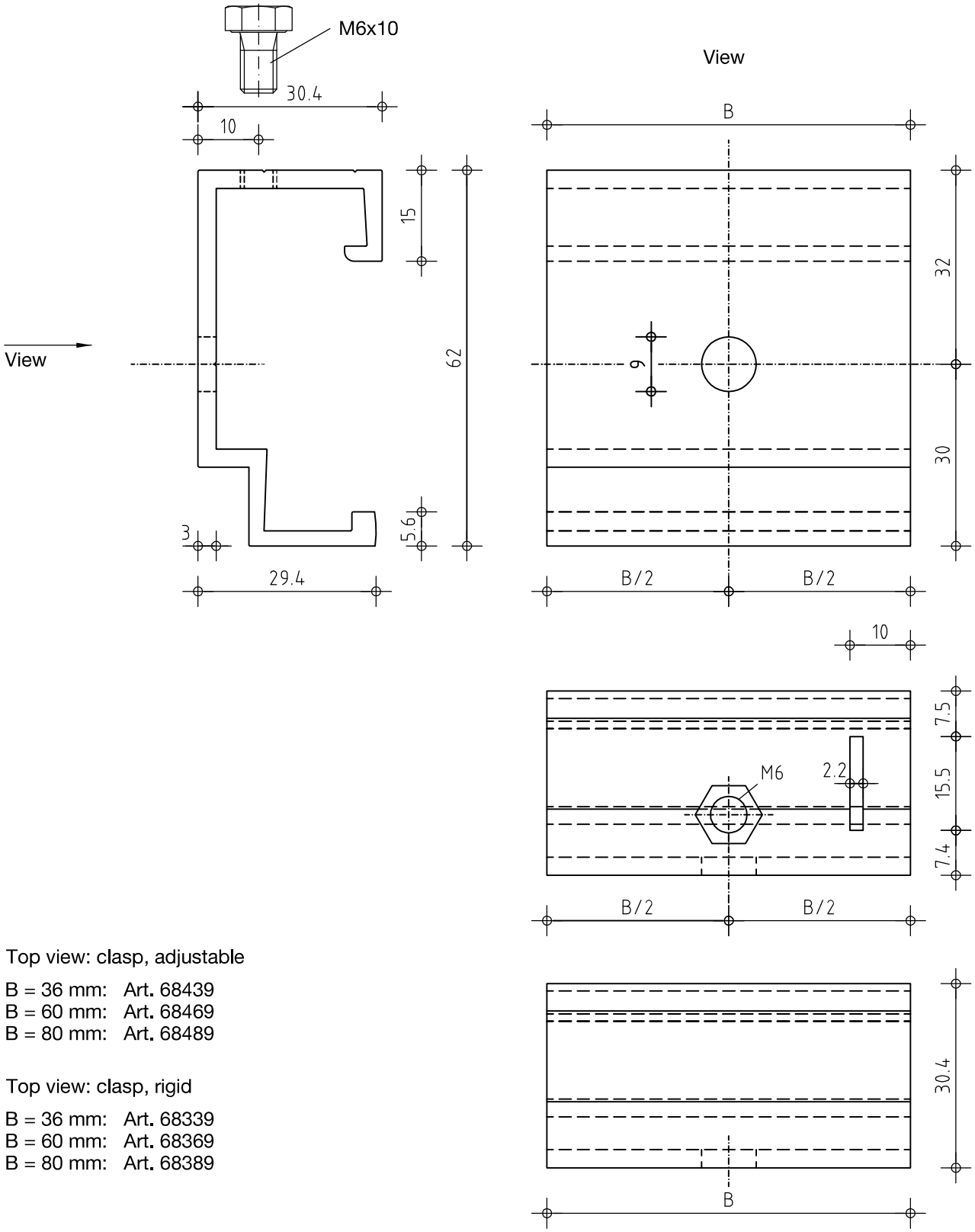

Top view: clasp, adjustable

B = 36 mm: Art. 68439
B = 60 mm: Art. 68469
B = 80 mm: Art. 68489

Top view: clasp, rigid

B = 36 mm: Art. 68339
B = 60 mm: Art. 68369
B = 80 mm: Art. 68389

Clasp ATK 103 P e.g. for Eternit square

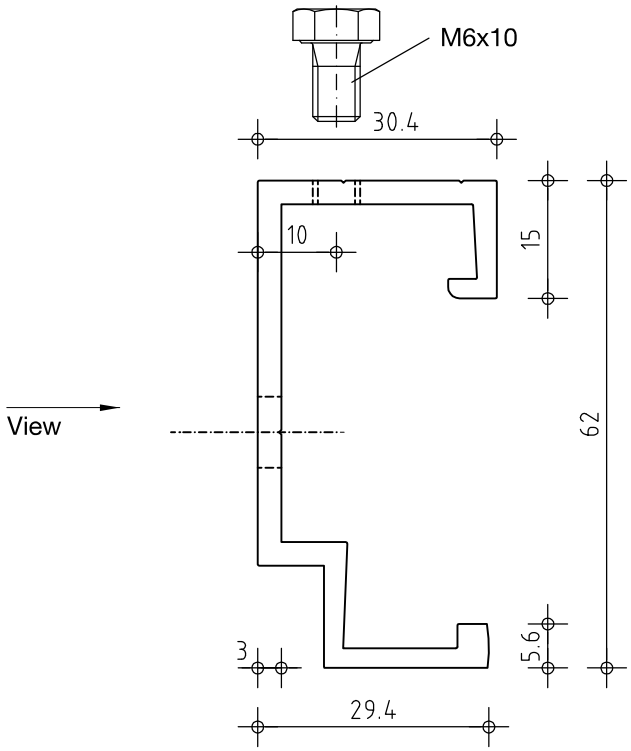

View: Single perforation

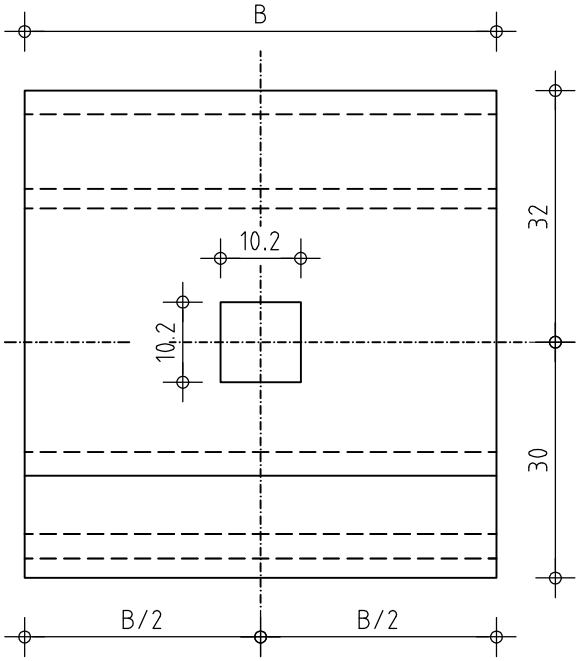

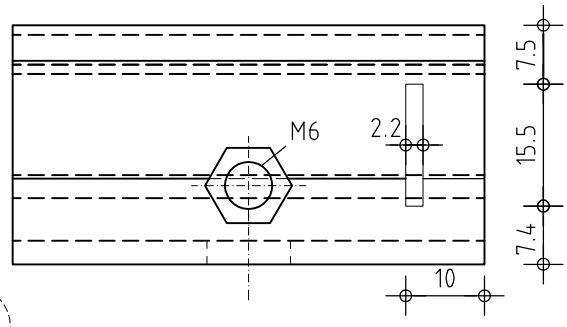

Top view: clasp, adjustable

B = 36 mm: Art. 68736
B = 60 mm: Art. 68760
B = 80 mm: Art. 68880

*B = 80 mm

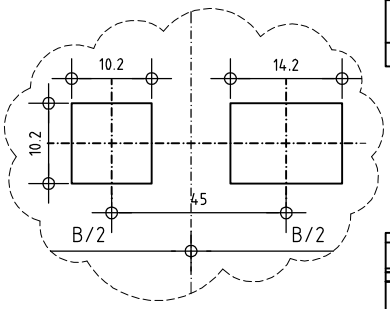

view: Double perforation

Top view: clasp, rigid

B = 36 mm: Art. 68836
B = 60 mm: Art. 68860
B = 80 mm: Art. 68780

B = 80 mm:

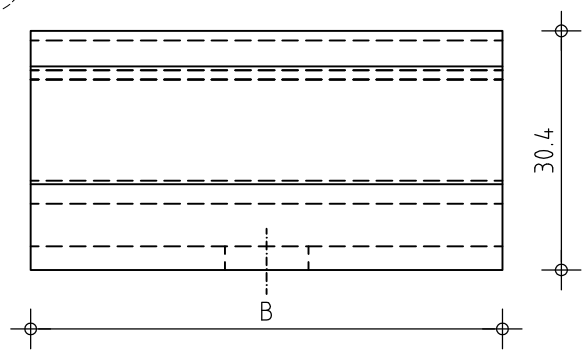

*Standard = Double perforation.
Single perforation on demand

fischer innovative solutions

Clasp ATK 103 P e.g. for Keil hexagonal

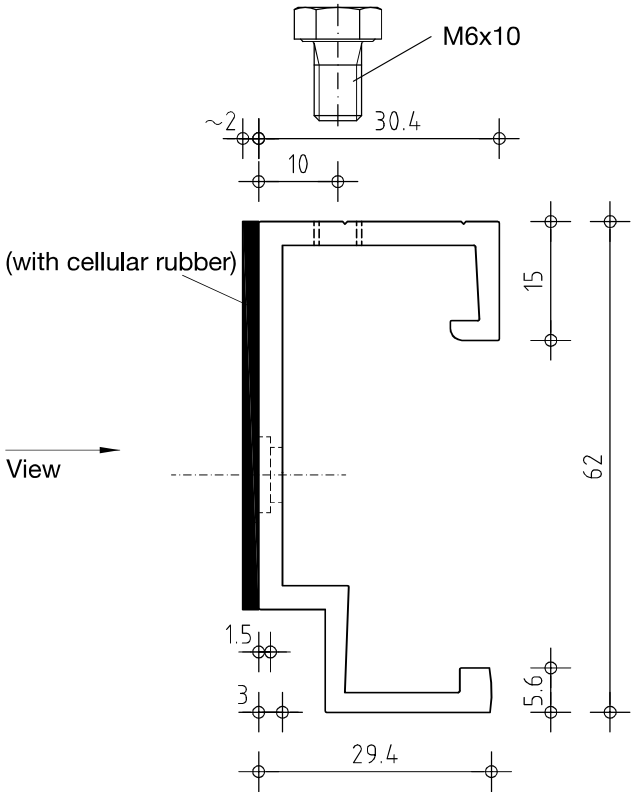

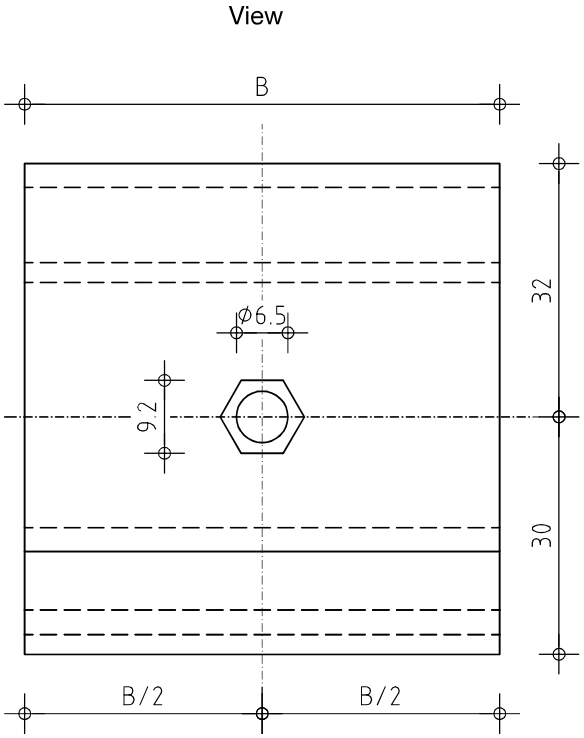

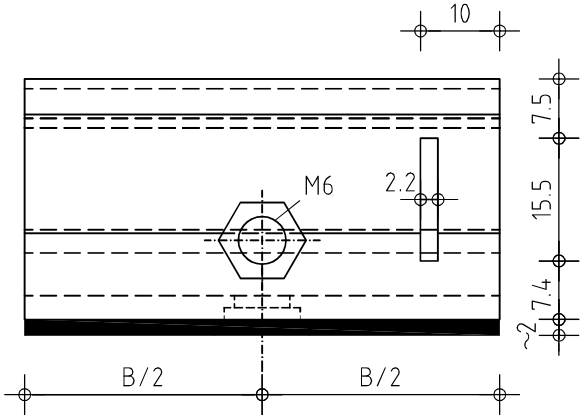

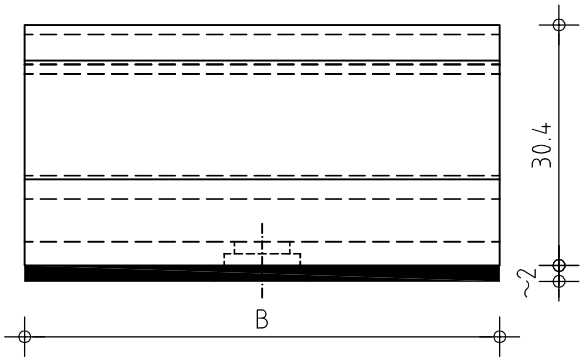

Top view: clasp, adjustable

B = 36 mm: Art. 68636
B = 60 mm: Art. 68660
B = 80 mm: Art. 68680

Top view: clasp, rigid

B = 36 mm: Art. 68536
B = 60 mm: Art. 68560
B = 80 mm: Art. 68580

Clasps without cellular rubber on demand

Clasp ATK 103 P e.g. for Lithodecor / M6

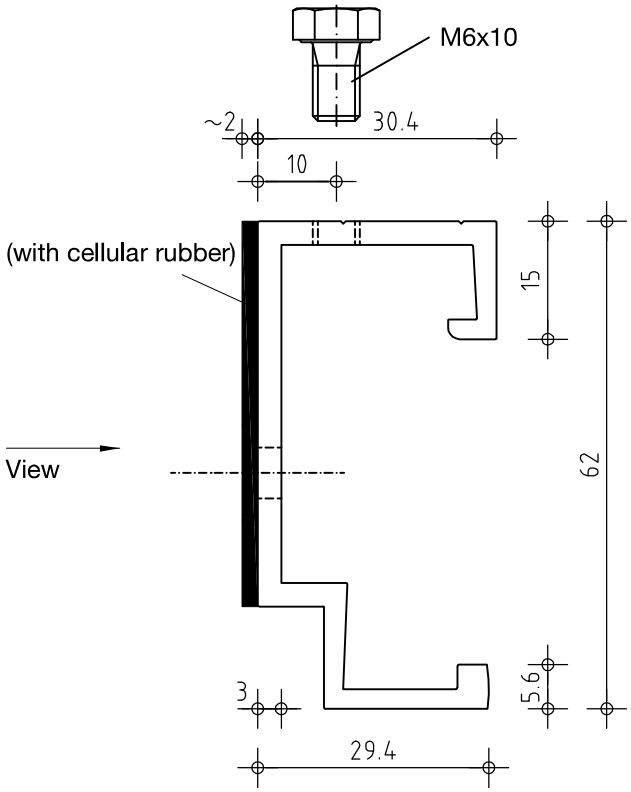

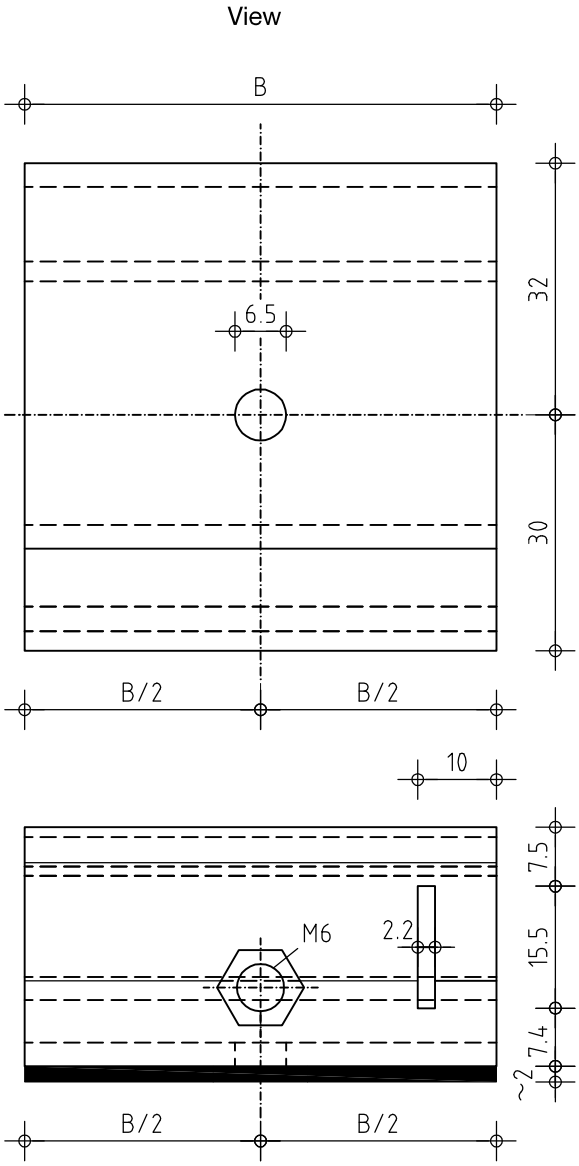

Top view: clasp, adjustable

B = 36 mm: Art. 68737
B = 60 mm: Art. 68761
B = 80 mm: Art. 68881

Top view: clasp, rigid

B = 36 mm: Art. 68837
B = 60 mm: Art. 68861
B = 80 mm: Art. 68781

Clasp ATK 103 P 20 e.g. for short threaded bolts M6

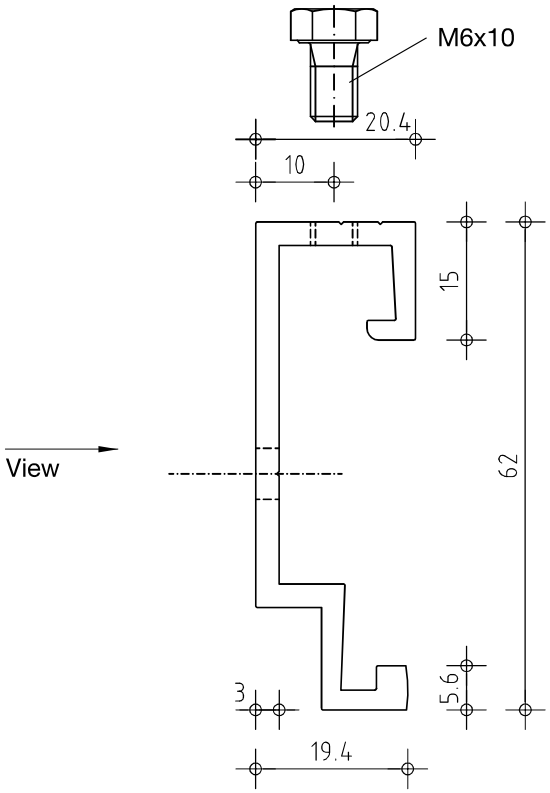

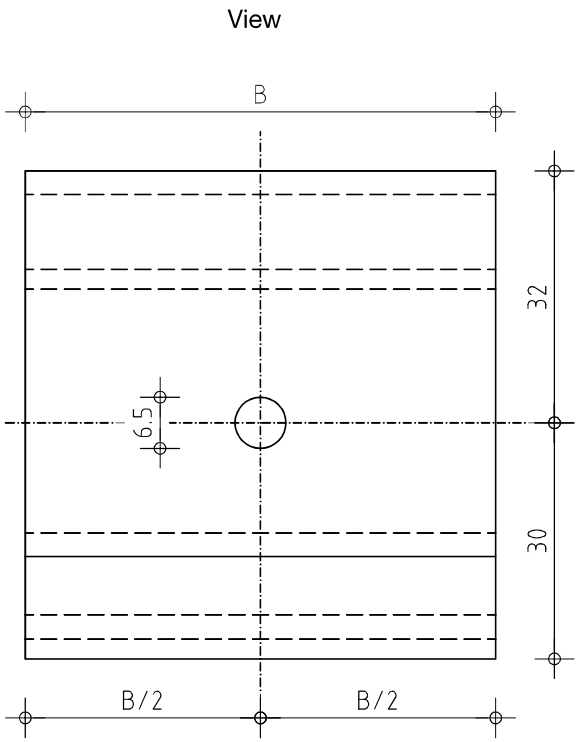

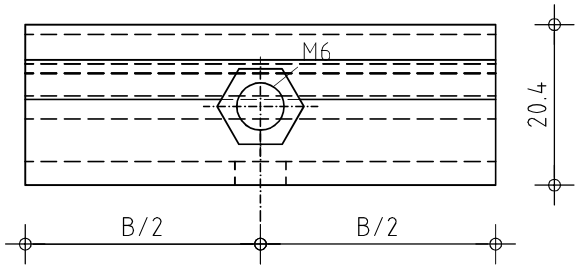

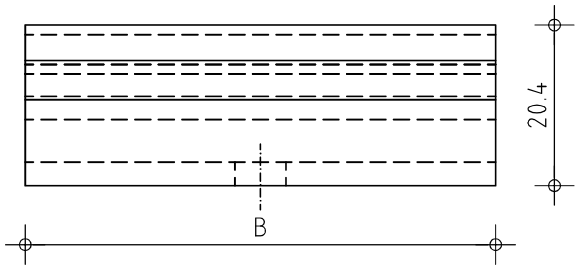

Top view: clasp, adjustable

B = 36 mm: Art. 28436
B = 60 mm: Art. 28460
B = 80 mm: Art. 28480

Top view: clasp, rigid

B = 36 mm: Art. 28336
B = 60 mm: Art. 28360
B = 80 mm: Art. 28380

Clasp ATK 103 P 20 e.g. for short threaded bolts M8

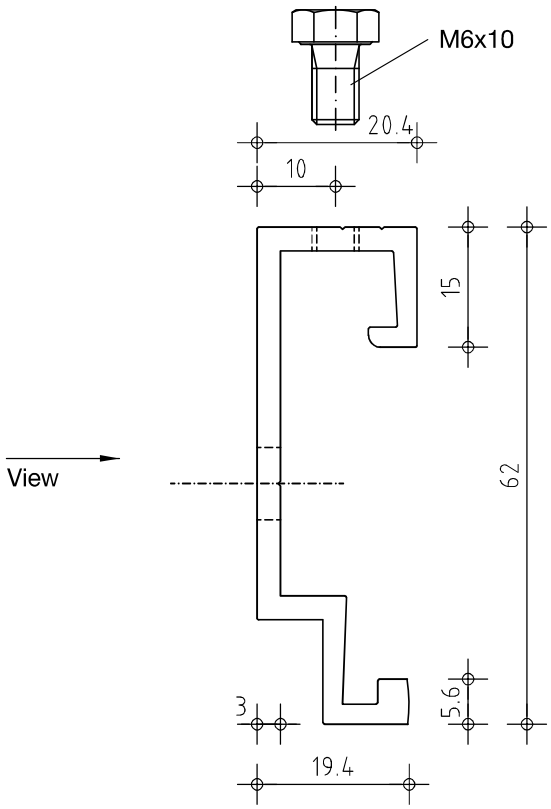

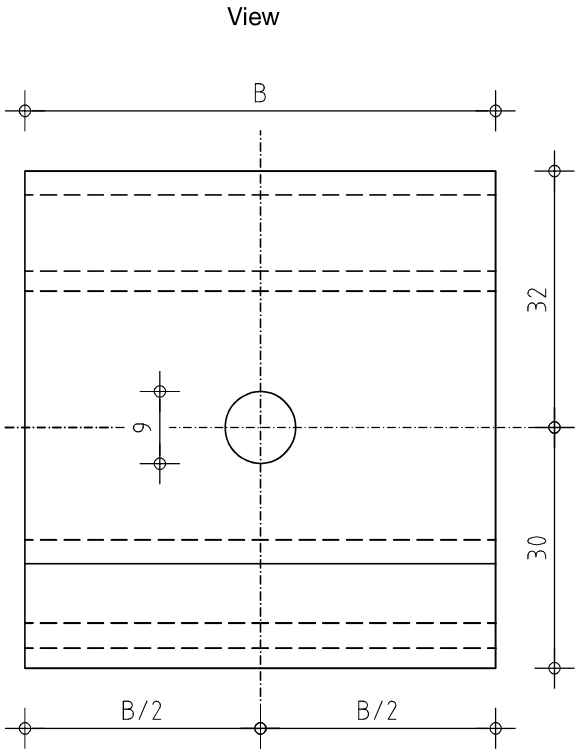

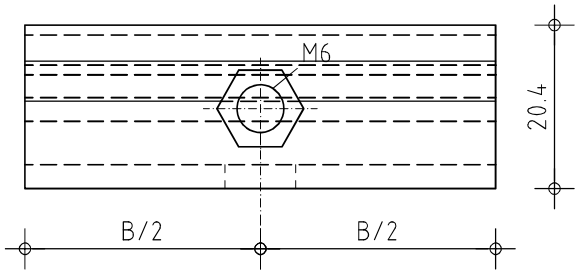

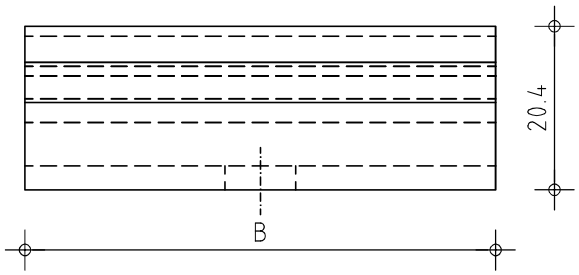

Top view: clasp, adjustable

B = 36 mm: Art. 28439
B = 60 mm: Art. 28469
B = 80 mm: Art. 28489

Top view: clasp, rigid

B = 36 mm: Art. 28339
B = 60 mm: Art. 28369
B = 80 mm: Art. 28389

Clasp ATK 103 P 20 e.g. for Eternit 4-kant

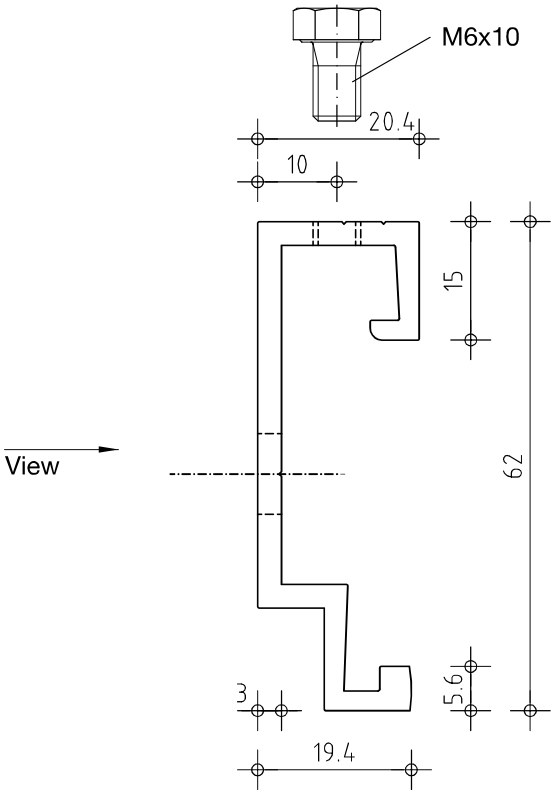

View: Single perforation

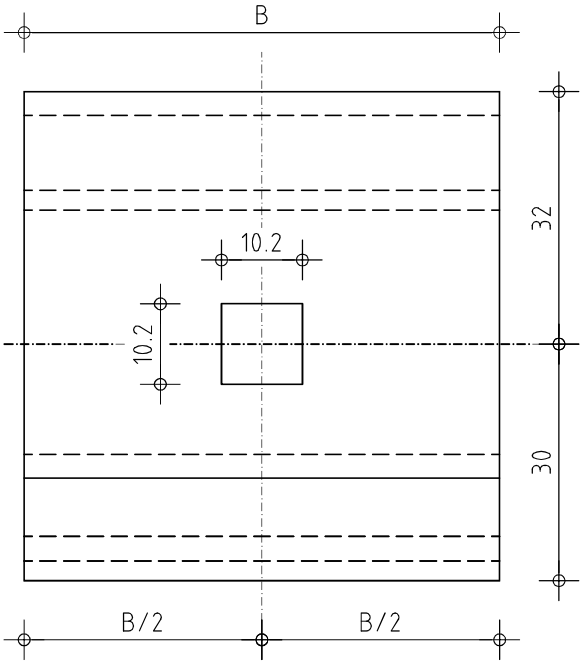

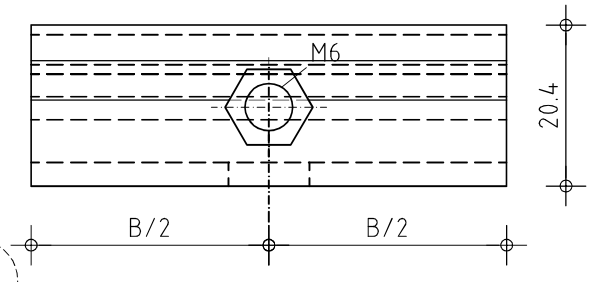

Top view: clasp, adjustable

B = 36 mm: Art. 28736
B = 60 mm: Art. 28760
B = 80 mm: Art. 28780

*B = 80 mm

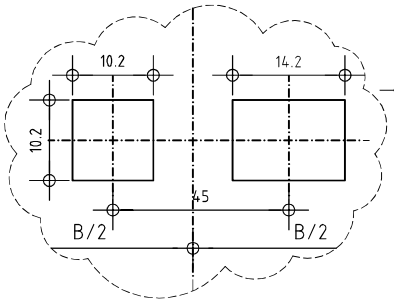

view: Double perforation

Top view: clasp, rigid

B = 36 mm: Art. 28836
B = 60 mm: Art. 28860
B = 80 mm: Art. 28880

B = 80 mm:

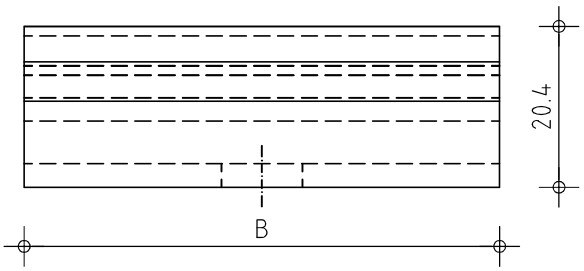

*Standard = Double perforation. Single perforation on demand

Clasp ATK 103 P 20 e.g. for Keil hexagonal

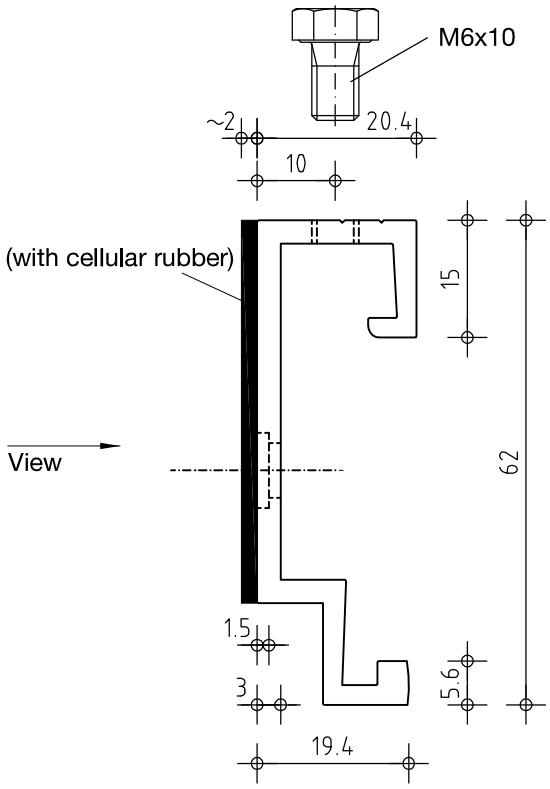

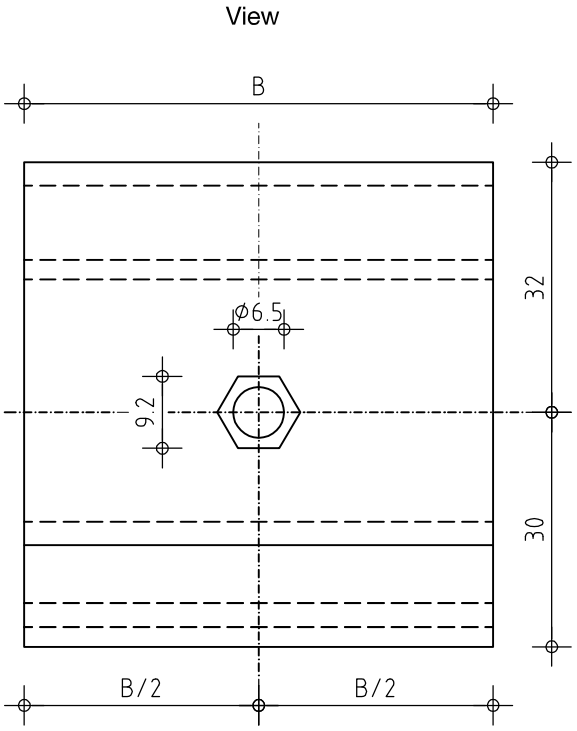

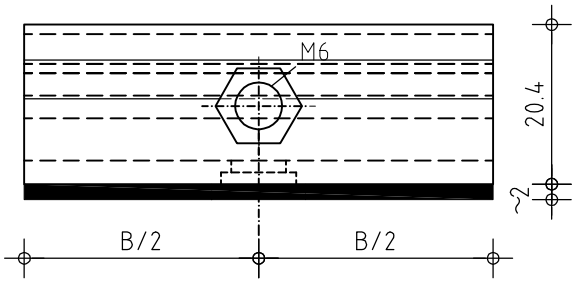

Top view: clasp, adjustable

B = 36 mm: Art. 28636
B = 60 mm: Art. 28660
B = 80 mm: Art. 28680

Top view: clasp, rigid

B = 36 mm: Art. 28536
B = 60 mm: Art. 28560
B = 80 mm: Art. 28580

Clasps without cellular rubber on demand

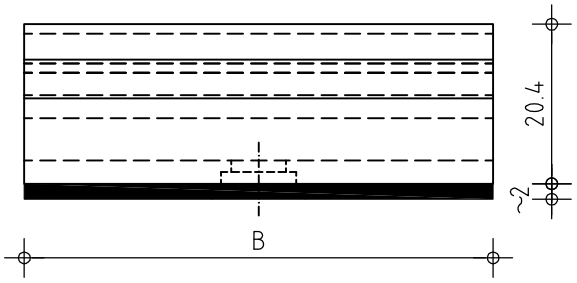

fischer
innovative solutions

Clasp ATK 103 P 20 e.g. for Lithodecor / M6

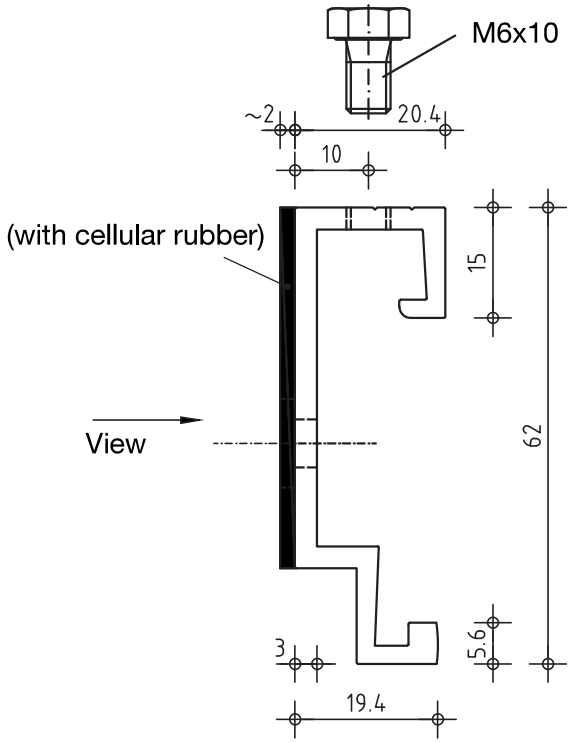

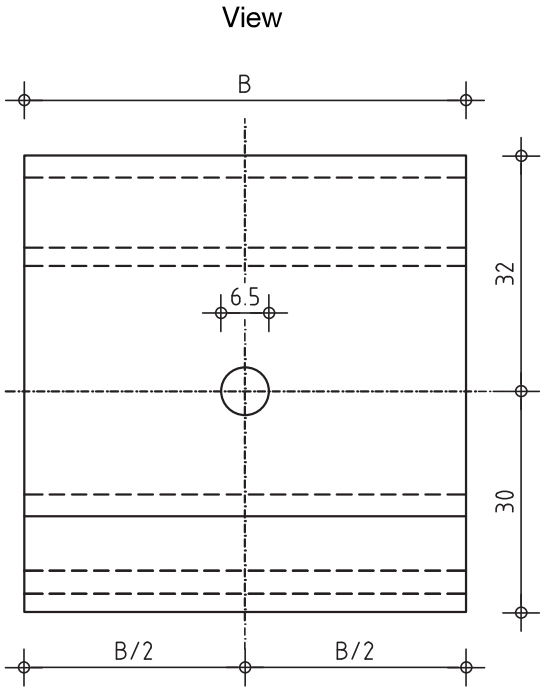

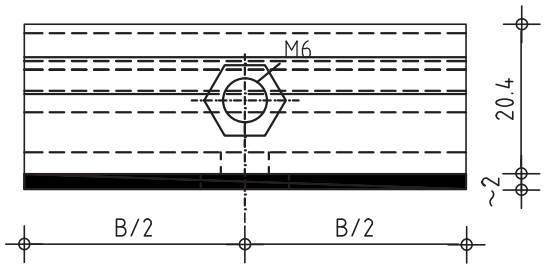

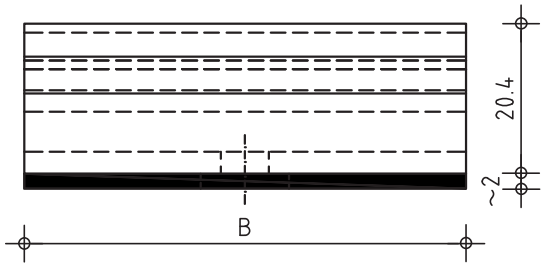

Top view: clasp, adjustable

B = 36 mm: Art. 28737
B = 60 mm: Art. 28761
B = 80 mm: Art. 28781

Top view: clasp, rigid

B = 36 mm: Art. 28837
B = 60 mm: Art. 28861
B = 80 mm: Art. 28881